Pioneer sound.vision.soul

Service Manual

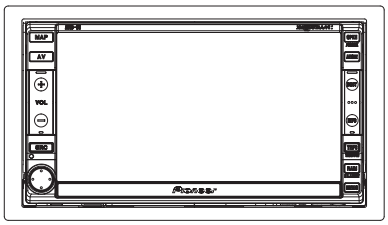

AVIC-D1/UC

ORDER NO.
CRT3466

DOUBLE-DIN DVD NAVIGATION SYSTEM

AVIC-D1/UC

This service manual should be used together with the following manual(s):

Model No.	Order No.	Mech.Module	Remarks
CX-3016	CRT3056	MS3	DVD Mech. Module:Circuit Description, Mech. Description, Disassembly
CX-3158	CRT3394	S10.1AAC	CD Mech. Module:Circuit Description, Mech. Description, Disassembly

This product has the unit part number as below.

Unit Part No.	Description
CPN1951	Navigation Unit

*) The unit part numbers listed above are not for the service components.

For details, refer to "Important Check Points for Good Servicing".

PIONEER CORPORATION 4-1, Meguro 1-chome, Meguro-ku, Tokyo 153-8654, Japan
PIONEER ELECTRONICS (USA) INC. P.O. Box 1760, Long Beach, CA 90801-1760, U.S.A.
PIONEER EUROPE NV Haven 1087, Keetberglaan 1, 9120 Melsele, Belgium
PIONEER ELECTRONICS ASIACENTRE PTE. LTD. 253 Alexandra Road, #04-01, Singapore 159936
ⒸPIONEER CORPORATION 2005

K-ZZW. APR. 2005 Printed in Japan

SAFETY INFORMATION

CAUTION

This service manual is intended for qualified service technicians; it is not meant for the casual do-it-yourselfer. Qualified technicians have the necessary test equipment and tools, and have been trained to properly and safely repair complex products such as those covered by this manual.
Improperly performed repairs can adversely affect the safety and reliability of the product and may void the warranty. If you are not qualified to perform the repair of this product properly and safely, you should not risk trying to do so and refer the repair to a qualified service technician.

WARNING

This product contains lead in solder and certain electrical parts contain chemicals which are known to the state of California to cause cancer, birth defects or other reproductive harm.
Health & Safety Code Section 25249.6 - Proposition 65

This product contains mercury. Disposal of this material may be regulated due to environmental considerations.
For disposal or recycling information, please contact your local authorities or the Electronics Industries Alliance: www.eiae.org.

● Service Precautions

1. You should conform to the regulations governing the product (safety, radio and noise, and other regulations), and should keep the safety during servicing by following the safety instructions described in this manual.

DVD MECHANISM MODULE section precaution

1. EJECT LOCK MODE for DVD mechanism
   In order to enter "EJECT LOCK" mode, reset start while pressing the "AV" and "INFO" keys together.
   Pressing the "AV" and "INFO" keys until monitor backlight is turned on.
   In order to exit "EJECT LOCK" mode, follow the same steps to enter this mode.
2. Before disassembling the unit, be sure to turn off the power. Unplugging and plugging the connectors during power-on mode may damage the ICs inside the unit.
3. To protect the pickup unit from electrostatic discharge during servicing, take an appropriate treatment (shorting-solder) by referring to "the DISASSEMBLY" .
4. After replacing the pickup unit, be sure to skew adjustment.
5. During disassembly, be sure to turn the power off since an internal IC might be destroyed when a connector is plugged or unplugged.

CD MECHANISM MODULE section precaution

1. Before disassembling the unit, be sure to turn off the power. Unplugging and plugging the connectors during power-on mode may damage the ICs inside the unit.
2. To protect the pickup unit from electrostatic discharge during servicing, take an appropriate treatment (shorting-solder) by referring to "the DISASSEMBLY".
3. After replacing the pickup unit, be sure to check the grating.

is a trademark of DVD Format/Logo Licensing Corporation.

[Important Check Points for Good Servicing]

In this manual, procedures that must be performed during repairs are marked with the below symbol.
Please be sure to confirm and follow these procedures.

1. Product safety

Please conform to product regulations (such as safety and radiation regulations), and maintain a safe servicing environment by following the safety instructions described in this manual.

① Use specified parts for repair.

Use genuine parts. Be sure to use important parts for safety.

② Do not perform modifications without proper instructions.

Please follow the specified safety methods when modification(addition/change of parts) is required due to interferences such as radio/TV interference and foreign noise.

③ Make sure the soldering of repaired locations is properly performed.

When you solder while repairing, please be sure that there are no cold solder and other debris.
Soldering should be finished with the proper quantity. (Refer to the example)

④ Make sure the screws are tightly fastened.

Please be sure that all screws are fastened, and that there are no loose screws.

⑤ Make sure each connectors are correctly inserted.

Please be sure that all connectors are inserted, and that there are no imperfect insertion.

⑥ Make sure the wiring cables are set to their original state.

Please replace the wiring and cables to the original state after repairs.
In addition, be sure that there are no pinched wires, etc.

⑦ Make sure screws and soldering scraps do not remain inside the product.

Please check that neither solder debris nor screws remain inside the product.

⑧ There should be no semi-broken wires, scratches, melting, etc. on the coating of the power cord.

Damaged power cords may lead to fire accidents, so please be sure that there are no damages.
If you find a damaged power cord, please exchange it with a suitable one.

⑨ There should be no spark traces or similar marks on the power plug.

When spark traces or similar marks are found on the power supply plug, please check the connection and advise on secure connections and suitable usage. Please exchange the power cord if necessary.

⑩ Safe environment should be secured during servicing.

When you perform repairs, please pay attention to static electricity, furniture, household articles, etc. in order to prevent injuries.
Please pay attention to your surroundings and repair safely.

2. Adjustments

To keep the original performance of the products, optimum adjustments and confirmation of characteristics within specification.
Adjustments should be performed in accordance with the procedures/instructions described in this manual.

3. Lubricants, Glues, and Replacement parts

Use grease and adhesives that are equal to the specified substance.
Make sure the proper amount is applied.

4. Cleaning

For parts that require cleaning, such as optical pickups, tape deck heads, lenses and mirrors used in projection monitors, proper cleaning should be performed to restore their performances.

5. Shipping mode and Shipping screws

To protect products from damages or failures during transit, the shipping mode should be set or the shipping screws should be installed before shipment. Please be sure to follow this method especially if it is specified in this manual.

CONTENTS

SAFETY INFORMATION 2
1. SPECIFICATIONS 5
2. EXPLODED VIEWS AND PARTS LIST 8
2.1 PACKING 8
2.2 EXTERIOR (1) 10
2.3 EXTERIOR (2) 12
2.4 EXTERIOR (3) 14
2.5 DVD MECHANISM MODULE(MS3) 16
2.6 CD MECHANISM MODULE(S10.1AACA) 18
3. BLOCK DIAGRAM AND SCHEMATIC DIAGRAM 20
3.1 BLOCK DIAGRAM 20
3.2 OVERALL CONNECTION DIAGRAM 32
3.3 CC UNIT (P/S) 34
3.4 CC UNIT (CPU, ASIC, SDRAM)(GUIDE PAGE) 36
3.5 CC UNIT (GRAPHIC)(GUIDE PAGE) 42
3.6 CC UNIT (ROM, SRAM, BUS-BUFFER) 48
3.7 CC UNIT (MAIN, CC CORE I/F) 50
3.8 CC UNIT (GPS, SENSOR, VIDEO, I/F) 52
3.9 GPS UNIT (GUIDE PAGE) 58
3.10 DVD CORE UNIT(MS3R)(GUIDE PAGE) 64
3.11 COMPOUND UNIT(A) AND COMPOUND UNIT(B) 72
3.12 PU UNIT(REFERENCE) 73
3.13 CD MECHANISM MODULE(GUIDE PAGE) 74
3.14 SYSTEM UNIT (AUDIO) 84
3.15 SYSTEM UNIT (SYSCOM, VIDEO, I/F)(GUIDE PAGE) 86
3.16 SYSTEM UNIT (P/S) 92
3.17 MONITOR PCB (GUIDE PAGE) 94
3.18 KEYBOARD PCB 102
3.19 PANEL PCB 104
3.20 CONNECTOR UNIT 106
3.21 MAIN PCB UNIT 108
4. PCB CONNECTION DIAGRAM 110
4.1 CC UNIT 110
4.2 GPS UNIT 114
4.3 DVD CORE UNIT(MS3R) 116
4.4 COMPOUND UNIT(A) AND COMPOUND UNIT(B) 120
4.5 CD CORE UNIT(S10.1) 122
4.6 SYSTEM UNIT 124
4.7 MONITOR PCB 128
4.8 KEYBOARD PCB 132
4.9 PANEL PCB 134
4.10 CONNECTOR UNIT 136
4.11 MAIN PCB UNIT 138
5. ELECTRICAL PARTS LIST 140
6. ADJUSTMENT 166
6.1 JIG CONNECTION DIAGRAM 166
6.2 DVD ADJUSTMENT 167
6.3 CD ADJUSTMENT 172
6.4 CHECKING THE GRATING AFTER CHANGING THE PICKUP UNIT 174
6.5 ERROR MODE 176
6.6 MONITOR PCB ADJUSTMENT 177
6.7 TEST MODE 186
6.8 USING THE TEST DISC 209
7. GENERAL INFORMATION 221
7.1 DIAGNOSIS 221
7.1.1 DISASSEMBLY 221
7.1.2 PCB LOCATIONS 231
7.1.3 CONNECTOR FUNCTION DESCRIPTION 232
7.2 IC 233
7.3 EXPLANATION 258
7.3.1 MECHANISM DESCRIPTIONS 258
7.3.2 OPERATIONAL FLOW CHART 264
8. OPERATIONS 266

1. SPECIFICATIONS

General

Rated power source.....14.4 V DC
(10.8 - 15.1 V allowable)
Grounding system..... Negative type
Max. current consumption
.....10.0 A
Backup current ..... 3.0 mA or less
Navigation unit:
Dimensions (W x H x D):
DIN
Chassis.....178 x 100 x 160 mm
(7 x 3-7/8 x 6-1/4 in.)
Nose.....191 x 114 x 5 mm
(7-1/2 x 4-1/2 x 1/4 in.)
D
Chassis.....178 x 100 x 165 mm
(7 x 3-7/8 x 6-1/2 in.)
Nose.....171 x 93 x 24 mm
(6-3/4 x 3-5/8 x 1 in.)
Weight .....2.9 kg (6.4 lbs)

Navigation

GPS Receiver:
System.....L1, C/Acode GPS
SPS (Standard Positioning Service)
Reception system.....8-channel multi-channel reception system
Reception frequency... 1,575.42 MHz
Sensitivity.....–130 dBm
Position update frequency
.....Approx. once per second
GPS antenna:
Antenna.....Micro strip flat antenna/ right-handed helical polarization
Antenna cable..... 5.0 m (16 ft. 5 in.)
Dimensions (W x H x D)
.....33 x 13 x 36 mm
(1-1/4 x 1/2 x 1-3/8 in.)
Weight .....105 g(0.23 lbs)

Display

Screen size/aspect ratio.....6.5 inch wide/16:9
(effective display area: 144 x 76 mm)
Pixels..... 336,960 (1,440 x 234)
Type..... TFT active matrix, transmissive type
Color system..... NTSC
Operating temperature range
.....–14 – +122°F
Storage temperature range
.....–4 – +176°F
Angle adjustment..... 0 – 21°
(initial settings: 0°)

Audio

Continuous power output is 22 W per channel minimum into 4 ohms, both channels driven 50 to 15,000 Hz with no more than 5% THD.
Maximum power output ..... 50 W x 4
50 W x 2 ch/4 Ω + 70 W x 1 ch/2 Ω (for subwoofer)
Load impedance..... 4 Ω (4 – 8 Ω [2 Ω for 1 ch] allowable)
Preout max output level/output impedance
..... 2.0 V/100 ohm
Equalizer (3-Band Parametric Equalizer):
Low
Frequency..... 40/80/100/160 Hz
Q Factor..... 0.35/0.59/0.95/1.15 (+6 dB when boosted)
Gain ..... ±12dB
Mid
Frequency..... 200/500/1k/2k Hz
Q Factor..... 0.35/0.59/0.95/1.15 (+6 dB when boosted)
Gain ..... ±12dB
High
Frequency..... 3.15k/8k/10k/12.5k Hz
Q Factor..... 0.35/0.59/0.95/1.15 (+6 dB when boosted)
Gain .....±12dB
Loudness contour
Low ..... +3.5 dB (100 Hz), +3 dB (10 kHz)
Mid ..... +10 dB (100 Hz), +6.5 dB (10 kHz)
High ..... +11 dB (100 Hz), +11 dB (10 kHz)
(volume: –30 dB)
HPF:
Frequency..... 50/80/125 Hz
Slope..... –12 dB/oct
Subwoofer:
Frequency..... 50/80/125 Hz
Slope.....–18 dB/oct
Gain .....±12dB
Phase ..... Normal/Reverse

CD Drive

System.....Compact disc audio system
Usable discs.....Compact disc
Signal format:
Sampling frequency.....44.1 kHz
Number of quantization bits
.....16; linear
Frequency characteristics... 5 – 20,000 Hz (±1 dB)
Signal-to-noise ratio..... 94 dB (1 kHz) (IHF-A network)
Dynamic range.....92 dB (1 kHz)
Number of channels..... 2 (stereo)
MP3 decoding format.....MPEG-1 & 2 Audio Layer 3
WMA decoding format ..... Ver 7, 7.1, 8, 9 (2ch audio)
Wave signal format..... Linear-PCM, MS ADPCM

FM tuner

Frequency range.....87.9 – 107.9 MHz

Usable sensitivity.....	8 dBf (0.7 µV/75 Ω, mono, S/N: 30 dB)
50 dB quieting sensitivity.....	10 dBf (0.9 µV/75 Ω, mono)
Signal-to-noise ratio.....	75 dB (IHF-A network)
Distortion.....	0.3 % (at 65 dBf, 1 kHz, stereo) 0.1 % (at 65 dBf, 1 kHz, mono)
Frequency response.....	30 – 15,000 Hz (±3 dB)
Stereo separation.....	45 dB (at 65 dBf, 1 kHz)
Selectivity.....	80 dB (±200 kHz)
Three-signal intermodulation (desired signal level)	30 dBf (two undesired signal level: 100 dBf)

AM tuner

Frequency range.....	530 – 1,710 kHz (10 kHz)
Usable sensitivity.....	18 µV (S/N: 20 dB)
Signal-to-noise ratio.....	65 dB (IHF-A network)

Note:

- Specifications and the design are subject to possible modifications without notice due to improvements.

A

B

C

D

E

F

2. EXPLODED VIEWS AND PARTS LIST

NOTES : • *Parts marked by " * " are generally unavailable because they are not in our Master Spare Parts List.*
• *The ⚠ mark found on some component parts indicates the importance of the safety factor of the part. Therefore, when replacing, be sure to use parts of identical designation.*
• *Screw adjacent to ▽ mark on the product are used for disassembly.*
• *For the applying amount of lobricants or glue, follow the instructions in this manual. (In the case of no amount instructions,apply as you think it appropriate.)*

2.1 PACKING

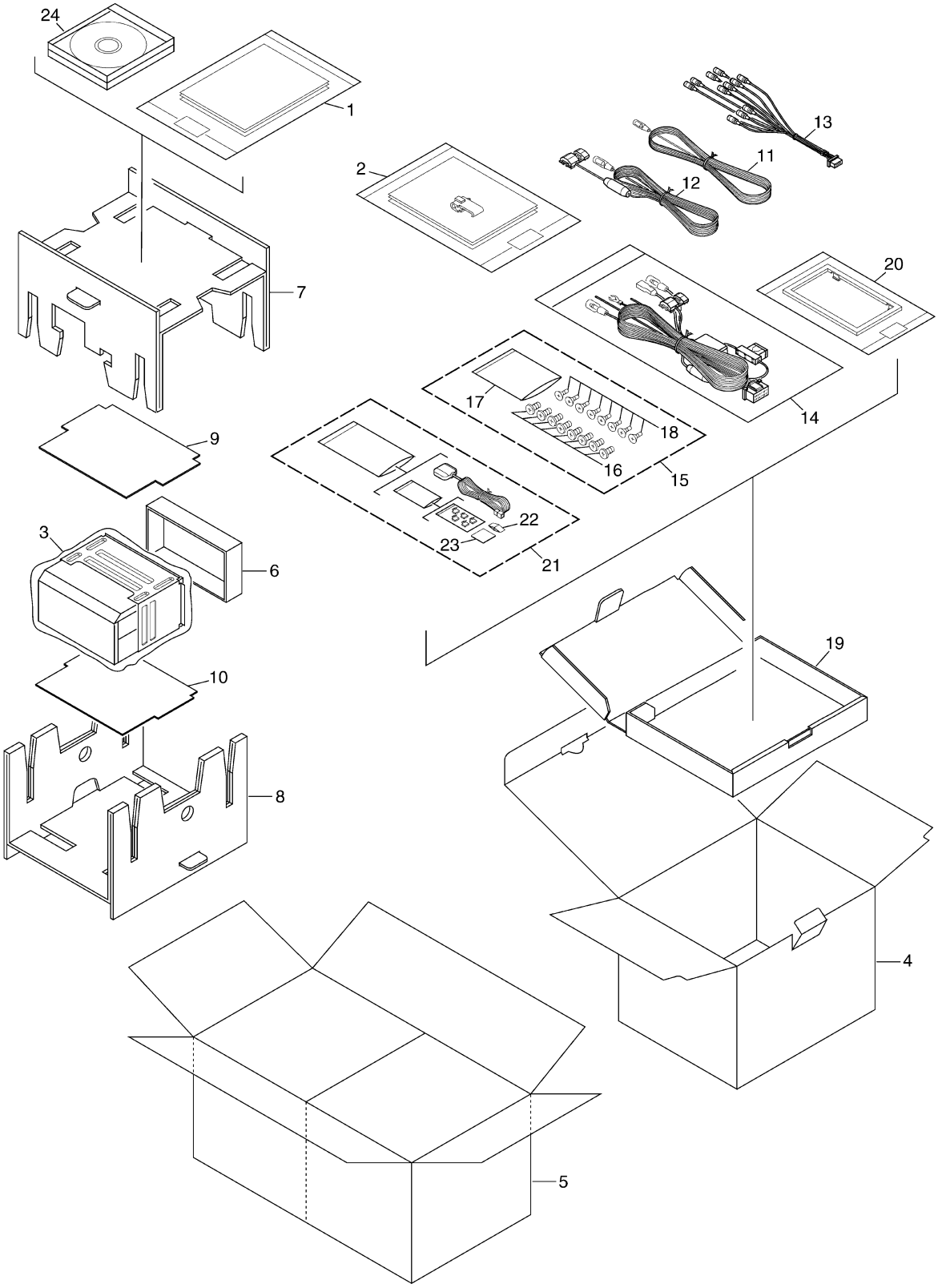

PACKING SECTION PARTS LIST

Mark	No.	Description	Part No.
*	1-1	Card	ARY1048
	1-2	Caution Card	CRP1310
*	1-3	Registration Card	CRY1238
	1-4	Polyethylene Bag	CEG1116
	1-5	Owner's Manual/POC/FRE	CRB2091
	1-6	Owner's Manual/POC/FRE	CRB2090
	2-1	Owner's Manual	CRB2088
	2-2	Owner's Manual	CRB2089
	2-3	Installation Manual	CRD3983
	2-4	Connector	CKX1049
	2-5	Polyethylene Bag	CEG1116
	3	Cover	CEG1359
	4	Carton	CHG5523
	5	Contain Box	CHL5523
	6	Protector	CHP2273
	7	Protector	CHP3006
	8	Protector	CHP3007
	9	Protector	CHP3045
	10	Protector	CHP3046
	11	Cord	CDE5044
	12	Cord	CDE6825
	13	Cord Assy	CDE7838
	14	Cord Assy	CDE7839
	15	Screw Assy	CEA3797
	16	Screw	BMZ50P060FTC
*	17	Polyethylene Bag	CEG-127
	18	Screw	CMZ50P060FTC
	19	Sub Carton	CHA3298
	20	Panel	CNS8298
	21	GPS Antenna Assy	CXC4864
	22	Water Proof Pad	CZN5442
	23	Sheet	CZN7008
	24	DVD-ROM	CPJ1167

● Owner's Manual, Installation Manual

Part No.	Language
CRB2088, CRB2089	English
CRB2090, CRB2091	French
CRD3983	English, French

● Be careful when ordering parts, as the following unit of this mainframe is described on several pages.

Description	Part No.	PCB name	Reference page and No.
MONI_PANEL Unit	CWM9920	MONITOR PCB	Page 15 No. 18(1/2)
		KEYBOARD PCB	Page 15 No. 18(2/2)
		PANEL PCB	Page 11 No. 58

2.2 EXTERIOR (1)

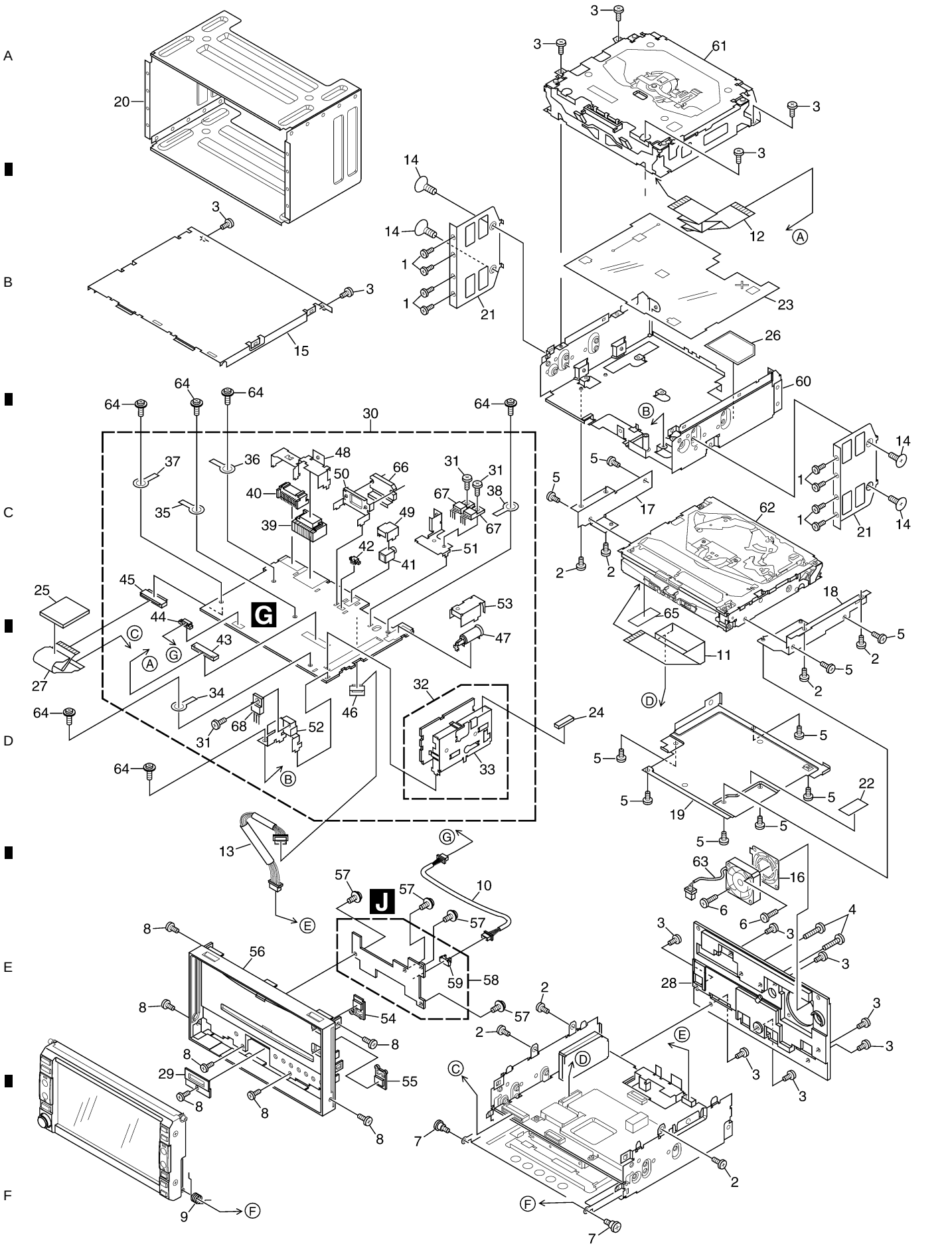

EXTERIOR (1) SECTION PARTS LIST

Mark No.	Description	Part No.
1	Screw	BMZ26P030FTB
2	Screw	BMZ26P040FTC
3	Screw	BMZ26P060FTB
4	Screw	BMZ26P140FTC
5	Screw(M2x3)	CBA1527
6	Screw(M3x10)	CBA1637
7	Screw(M2x2)	CBA1735
8	Screw(M2x3)	CBA1877
9	Spring	CBH2888
10	Cord Assy	CDE7908
11	FFC	CDE8006
12	FFC	CDE8007
13	Cord Assy	CDE8008
14	Screw	CMZ50P060FTC
15	Case	CNB3109
16	Cover	CND1509
17	Holder	CND2682
18	Holder	CND2683
19	Shield	CND2775
20	Holder	CND2794
21	Bracket	CND2795
22	Insulator	CNM8550
23	Insulator	CNM9442
24	Gasket	CNM9593
25	Cushion	CNM9653
26	Shield	CNM9656
27	Flexible PCB	CNP8450
28	Heat Sink	CNR1785
29	Cover	CNS8290
30	System Unit	CWM9918
31	Screw	BMZ26P050FTC
32	FM/AM Tuner Unit	CWE1646
33	Holder	CND1054
34	Terminal(CN1302)	CKF1064
35	Terminal(CN1303)	CKF1064
36	Terminal(CN1304)	CKF1064
37	Terminal(CN1305)	CKF1064
38	Terminal(CN4301)	CKF1064
39	Connector(CN1801)	CKM1438
40	Connector(CN1401)	CKM1460
41	Jack(CN1450)	CKN1036
42	Connector(CN1803)	CKS4822
43	Connector(CN1301)	CKS4919
44	Connector(CN1651)	CKS4980
45	Connector(CN1701)	CKS5110
46	Connector(CN1802)	CKS5270
47	Antenna Jack(CN4300)	CKX1056
48	Holder	CND2667
49	Holder	CND2668
50	Holder	CND2669
51	Holder	CND2670
52	Holder	CND2671
53	Holder	CND2685
54	Button(CD EJECT)	CAC9119
55	Button(DVD EJECT)	CAC9120
56	Panel Unit	CXC4435
57	Screw	IMS26P040FTC
58	MONI_PANEL Unit	CWM9920
59	Connector(CN5901)	CKS4825
60	Chassis Unit	CXC4333
61	CD Mechanism Module(S10.1AACA)	CXK5668
62	DVD Mechanism Module(MS3)	CXK6333
63	Fan Motor	CXM1320
64	Screw	ISS26P055FTC
65	Tape	CNM9890
66	IC(IC4200)	PAL007B
67	Transistor(Q1900, 1902)	2SB1185
68	Transistor(Q1922)	2SD2396

2.3 EXTERIOR (2)

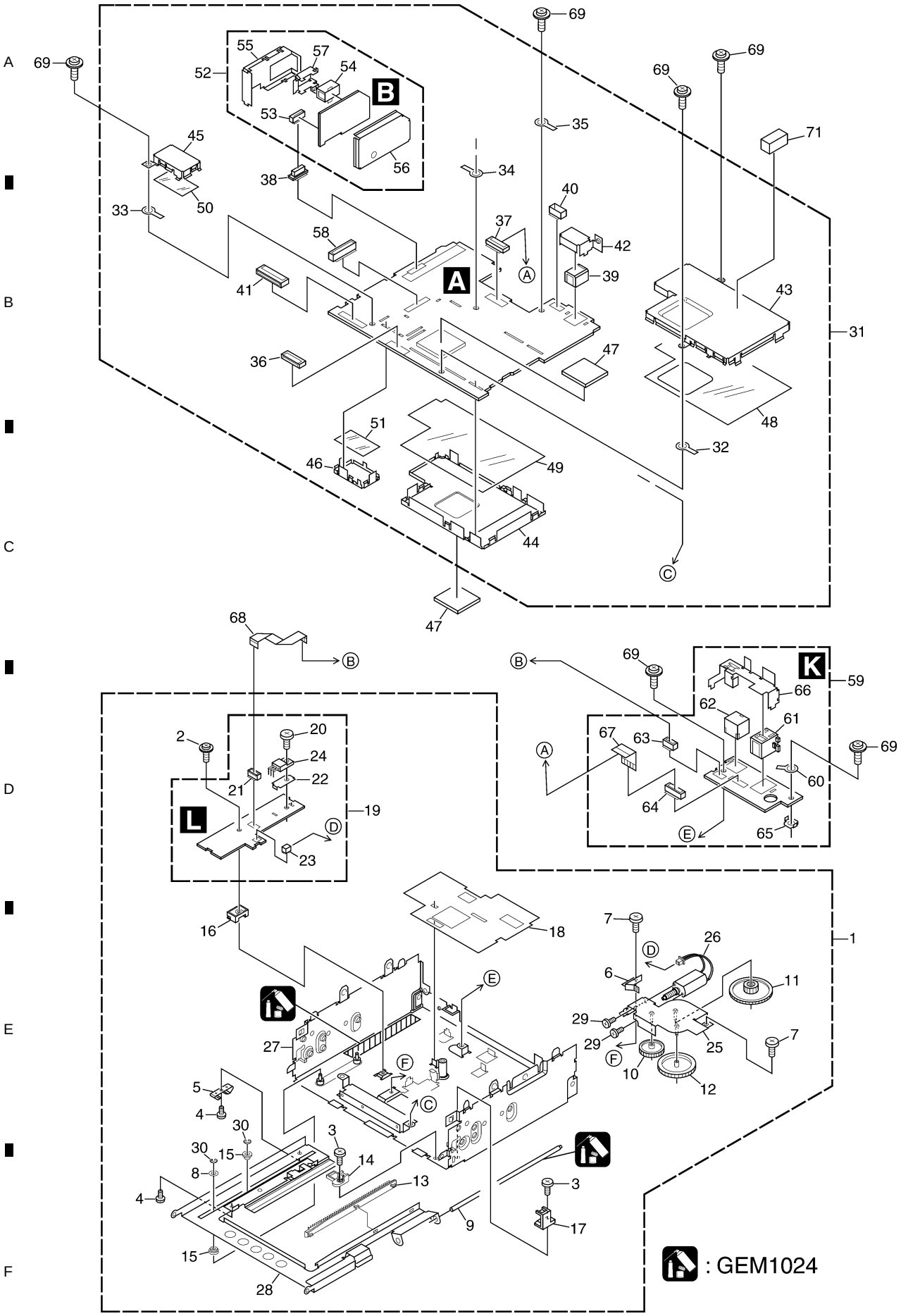

EXTERIOR (2) SECTION PARTS LIST

Mark No.	Description	Part No.
1	Drive Unit	CXC4423
2	Screw(M2x6)	CBA1399
3	Screw(M2x1.5)	CBA1615
4	Screw(M2x2)	CBA1771
5	Spring	CZB3092
6	Spring	CZB3093
7	Screw	CZB3097
8	Washer	CZB5003
9	Shaft	CZL3010
10	Gear	CZN7011
11	Gear	CZN7012
12	Gear	CZN7013
13	Rack	CZN7014
14	Holder	CZN7015
15	Roller	CZN7052
16	Holder	CZN7042
17	Holder	CZN7043
18	Sheet	CZN7044
19	Main PCB Unit	CZW3097
20	Screw	BMZ26P050FTC
21	Connector(CN2)	CKS4600
22	Heat Sink	CND1228
23	Connector(CN1)	CZK3071
24	Transistor(Q1)	2SB1185
25	Bracket Unit	CZX5101
26	Motor Unit(FLAP)(M10)	CZX5102
27	Chassis Unit	CZX5127
28	Frame Unit	CZX5160
29	Screw	JFZ20P020FTC
30	Washer	YE15S
31	CC Unit	CWM9919
32	Terminal(CN100)	CKF1064
33	Terminal(CN601)	CKF1064
34	Terminal(CN602)	CKF1064
35	Terminal(CN802)	CKF1064
36	Connector(CN701)	CKS3805
37	Connector(CN702)	CKS3991
38	Connector(CN551)	CKS4065
39	Connector(CN651)	CKS4473
40	Connector(CN801)	CKS4674
41	Connector(CN605)	CKS5110
42	Holder	CND2672
43	Shield	CND2675
44	Shield	CND2676
45	Shield	CND2679
46	Shield	CND2680
47	Sheet	CNM6903
48	Insulator	CNM9436
49	Insulator	CNM9437
50	Insulator	CNM9438
51	Insulator	CNM9439
52	GPS Unit	CWX3141
53	Connector(CN461)	CKS4280
54	Connector(CN504)	CKS4432
55	Shield	CNC9191
56	Shield	CNC9192
57	Holder	CND1535
58	Connector(CN2)	DKN1236
59	Connector Unit	CWM9921
60	Terminal(CN2807)	CKF1064
61	Connector(CN2802)	CKS3414
62	Connector(CN2801)	CKS4590
63	Connector(CN2806)	CKS4600
64	Connector(CN2804)	CKS5209
65	Holder(CN58)	CNC2218
66	Holder	CND2673
67	FFC	CDE7864
68	FFC	CDE8005
69	Screw	ISS26P055FTC
70	•••••	
71	Cushion	CNM9416

2.4 EXTERIOR (3)

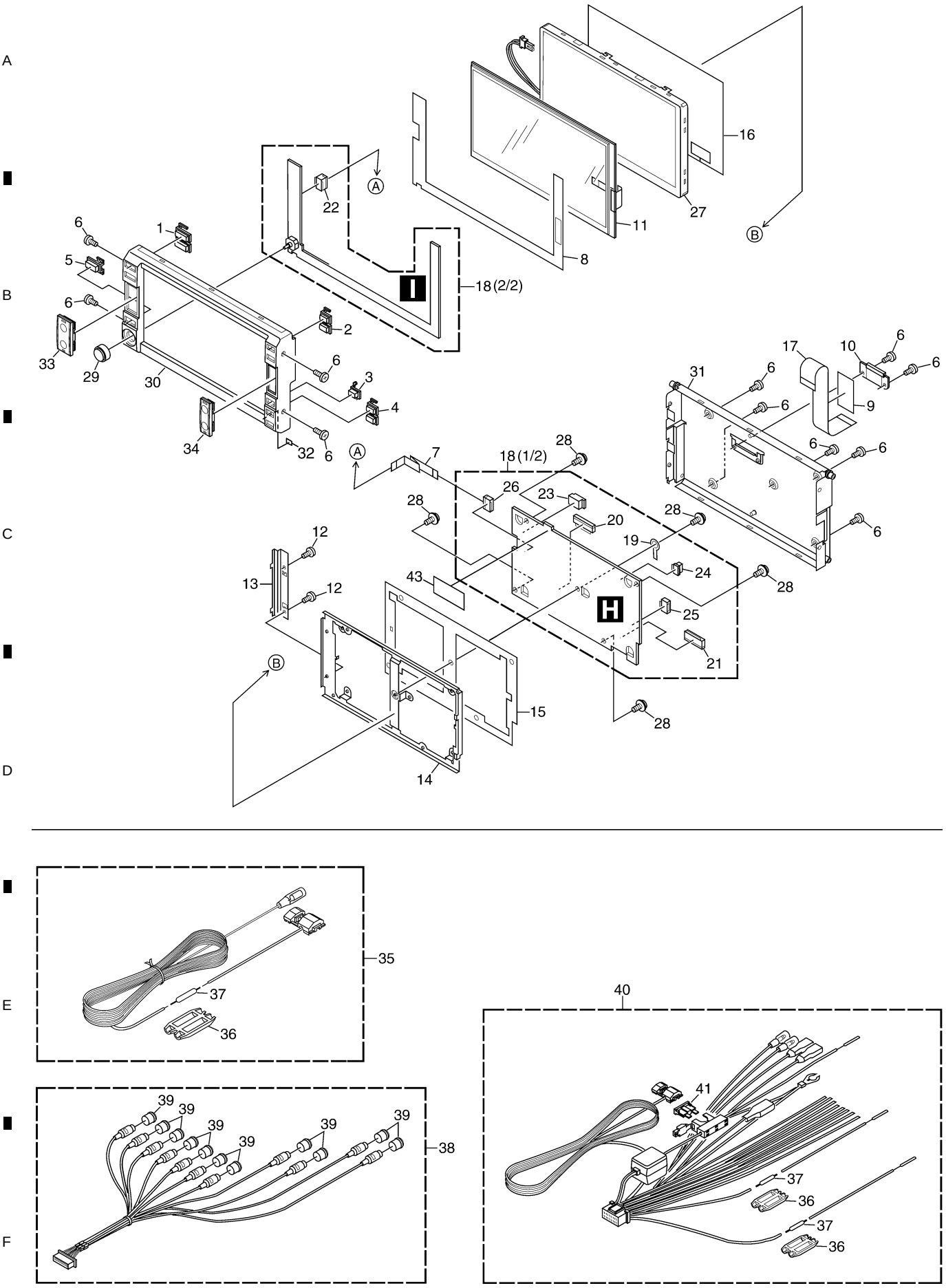

EXTERIOR (3) SECTION PARTS LIST

Mark	No.	Description	Part No.
	1	Button(MAP, AV)	CAC9112
	2	Button(OPEN, ANGLE)	CAC9114
	3	Button(TRFC)	CAC9115
	4	Button(P.ADJ, MEMO)	CAC9118
	5	Button(SRC)	CAC9429
	6	Screw(M2x3)	CBA1877
	7	FFC	CDE8003
	8	Insulator	CNM9475
	9	Cover	CNM9655
	10	Guide	CNV5169
	11	Touch Panel	CSX1085
	12	Screw(M2x2)	CBA1771
	13	Holder	CNC9991
	14	Holder	CND3075
	15	Insulator	CNM9567
	16	Insulator	CNM9803
	17	Flexible PCB	CNP8744
	18	MONI_PANEL Unit	CWM9920
	19	Terminal(CN5003)	CKF1064
	20	Connector(CN5002)	CKS3968
	21	Connector(CN5801)	CKS3991
	22	Connector(CN5700)	CKS4130
	23	Connector(CN5331)	CKS4428
	24	Connector(CN5009)	CKS4496
	25	Connector(CN5007)	CKS4675
	26	Connector(CN5008)	CKS5208
	27	LCD Panel	CWX3229
	28	Screw	PMB20P040FTC
	29	Knob Unit	CXC4417
	30	Grille Unit	CXC4434
	31	Case Unit	CXC4436
	32	Sheet	CNM9862
	33	Button Unit(VOL)	CXC4455
	34	Button Unit(DEST, INFO)	CXC4456
	35	Cord	CDE6825
	36	Cap	CNS1472
	37	Resistor	RS1/2PMF102J
	38	Cord Assy	CDE7838
	39	Cap	CNV6727
	40	Cord Assy	CDE7839
⚠	41	Fuse(10A)	CEK1136
	42	Cap	CNS1472
	43	Shield	CNM9858

2.5 DVD MECHANISM MODULE(MS3)

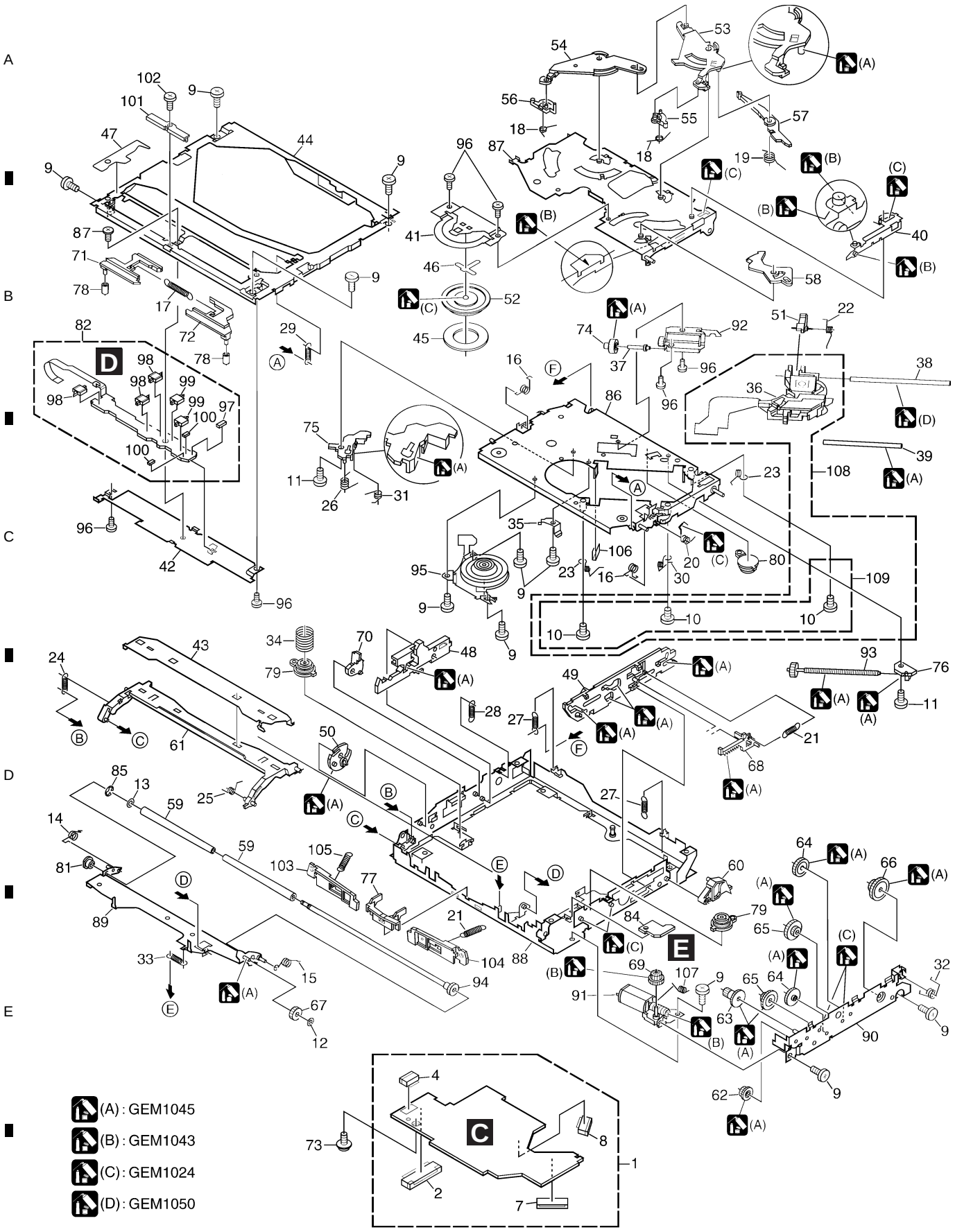

DVD MECHANISM MODULE(MS3) SECTION PARTS LIST

Mark	No.	Description	Part No.
	1	DVD Core Unit(MS3R)	CWX3178
	2	Connector(CN601)	CKS5055
	3	•••••	
	4	Connector(CN1202)	CKS5017
	5	•••••	
	6	•••••	
	7	Connector(CN1101)	CKS4842
	8	Connector(CN1201)	CKS5043
	9	Screw	BMZ20P020FTC
	10	Screw(M2 x 3.5)	CBA1571
	11	Screw(M2 x 2.5)	CBA1623
	12	Washer	CBF1038
	13	Washer	CBF1064
	14	Spring	CBH2586
	15	Spring	CBH2587
	16	Spring	CBH2588
	17	Spring	CBH2589
	18	Spring	CBH2590
	19	Spring	CBH2591
	20	Spring	CBH2592
	21	Spring	CBH2593
	22	Spring	CBH2594
	23	Spring	CBH2595
	24	Spring	CBH2596
	25	Spring	CBH2597
	26	Spring	CBH2598
	27	Spring	CBH2599
	28	Spring	CBH2600
	29	Spring	CBH2601
	30	Spring	CBH2602
	31	Spring	CBH2603
	32	Spring	CBH2604
	33	Spring	CBH2605
	34	Spring	CBH2711
	35	Spring	CBL1564
	36	Pickup Unit(Service)	CXX1640
	37	Shaft	CLA3881
	38	Shaft	CLA4206
	39	Shaft	CLA4207
	40	Lever	CNC9933
	41	Holder	CNC9939
	42	Holder	CND2251
	43	Holder	CNC9941
	44	Frame	CND2250
	45	Sheet	CNM6883
	46	Sheet	CNM8283
	47	Sheet	CNM8643
	48	Lever	CNV8076
	49	Lever	CNV7155
	50	Cam	CNV7156
	51	Rack	CNV7157
	52	Clamper	CNV7158
	53	Arm	CNV7159
	54	Arm	CNV7160
	55	Arm	CNV7161
	56	Arm	CNV7162
*	57	Arm	CNV7163
	58	Arm	CNV7164
	59	Roller	CNV7165
	60	Arm	CNV7166
	61	Guide	CNV8093
	62	Gear	CNV7169
	63	Gear	CNV7170
	64	Gear	CNV7171
	65	Gear(Black)	CNV7172
	66	Gear	CNV7173
	67	Gear	CNV7174
	68	Rack	CNV7175
	69	Gear	CNV7176
	70	Arm	CNV8077
	71	Lever	CNV7178
	72	Lever	CNV7179
	73	Screw	IMS20P030FTC
	74	Gear	CNV7181
	75	Holder	CNV7183
	76	Holder	CNV7184
	77	Guide	CNV7745
	78	Roller	CNV7344
	79	Damper	CNV7470
	80	Damper	CNV7471
	81	Collar	CNV7645
	82	Compound Unit(A)	CWX3154
	83	Screw(M1.4x1.4)	CBA1787
	84	Compound Unit(B)	CWX3156
	85	Washer	YE20FTC
	86	Chassis Unit	CXC3629
	87	Arm Unit	CXB8681
	88	Frame Unit	CXB8683
	89	Arm Unit	CXC4701
	90	Bracket Unit	CXB8685
	91	Motor Unit(LOADING)(M1)	CXC4659
	92	Motor Unit(CARRIAGE)(M2)	CXC4314
	93	Screw Unit	CXB8689
	94	Roller Unit	CXB8690
	95	Motor(SPINDLE)(M3)	CXM1308
	96	Screw	JFZ20P018FTC
	97	Photo-transistor(Q1299)	CPT231SCTD
	98	Switch(S1201)	CSN1069
	99	Spring Switch(S1204)	CSN1070
	100	Resistor(R1298)	RS1/16S0R0J
	101	Guide	CNV7615
	102	Screw(M1.7x1.2)	CBA1572
	103	Arm	CNV7742
	104	Arm	CNV7743
	105	Spring	CBH2710
	106	Spring	CBL1643
	107	Spring	CBH2712
	108	Pickup Unit(Service)(Screw)	GXX1234
	109	Screw Assy	CXX1750

2.6 CD MECHANISM MODULE(S10.1AACA)

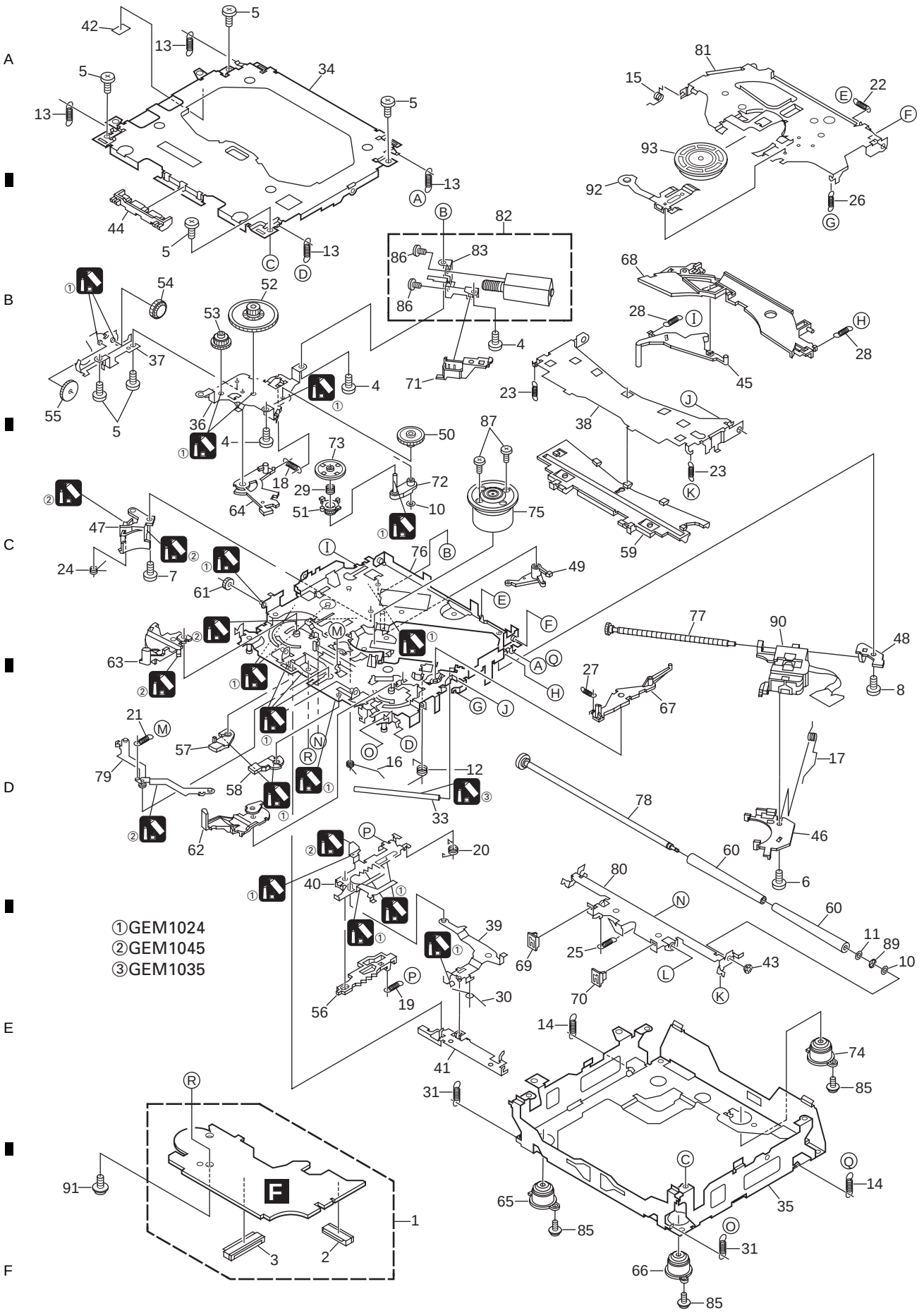

CD MECHANISM MODULE(S10.1AACA) SECTION PARTS LIST

Mark No.	Description	Part No.
1	CD Core Unit(S10.1)	CWX3096
2	Connector(CN101)	CKS4182
3	Connector(CN901)	CKS4017
4	Screw	BMZ20P035FTC
5	Screw	BSZ20P040FTC
6	Screw(M2x4)	CBA1362
7	Screw(M2x3)	CBA1824
8	Screw(M2x3)	CBA1825
9	•••••	
10	Washer	CBF1038
11	Washer	CBF1060
12	Spring	CBH2390
13	Spring	CBH2606
14	Spring	CBH2607
15	Spring	CBH2608
16	Spring	CBH2609
17	Spring	CBH2610
18	Spring	CBH2735
19	Spring	CBH2612
20	Spring	CBH2613
21	Spring	CBH2614
22	Spring	CBH2615
23	Spring	CBH2616
24	Spring	CBH2617
25	Spring	CBH2620
26	Spring	CBH2621
27	Spring	CBH2641
28	Spring	CBH2642
29	Spring	CBH2643
30	Spring	CBH2659
31	Spring	CBH2688
32	•••••	
33	Shaft	CLA4441
34	Frame	CNC9962
35	Frame	CNC9963
36	Bracket	CND2712
37	Bracket	CND1895
38	Arm	CNC9968
39	Arm	CND1909
40	Lever	CND2032
41	Lever	CNC9984
42	Sheet	CNM8134
43	Collar	CNV7798
44	Guide	CNV7799
45	Arm	CNV8403
46	Rack	CNV8374
47	Holder	CNV8376
48	Holder	CNV8377
49	Arm	CNV8378
50	Gear	CNV8379
51	Gear	CNV8380
52	Gear	CNV8381
53	Gear	CNV8382
54	Gear	CNV8383
55	Gear	CNV8384
56	Rack	CNV8385
57	Arm	CNV8386
58	Arm	CNV8387
59	Guide	CNV8388
60	Roller	CNV7218
61	Gear	CNV8389
62	Arm	CNV8391
63	Arm	CNV8390
64	Arm	CNV8392
65	Damper	CNV7313
66	Damper	CNV7314
67	Arm	CNV8394
68	Arm	CNV8395
69	Guide	CNV8396
70	Guide	CNV8397
71	Holder	CNV8398
72	Arm	CNV8402
73	Gear	CNV8400
74	Damper	CNV7618
75	Motor Unit(M1)	CXC4440
76	Chassis Unit	CXC2318
77	Screw Unit	CXB8729
78	Gear Unit	CXC2397
79	Arm Unit	CXC2316
80	Arm	CND1896
81	Arm	CND1894
82	Motor Unit(M2)	CXB8933
83	Bracket	CNC9985
84	•••••	
85	Screw(M2x5)	EBA1028
86	Screw	JFZ20P020FTC
87	Screw	JGZ17P022FTC
88	•••••	
89	Washer	YE20FTC
90	Pickup Unit(P10)(Service)	CXX1641
91	Screw	IMS26P030FTC
92	Spring	CBL1635
93	Clamper	CNV8372

3. BLOCK DIAGRAM AND SCHEMATIC DIAGRAM

3.1 BLOCK DIAGRAM

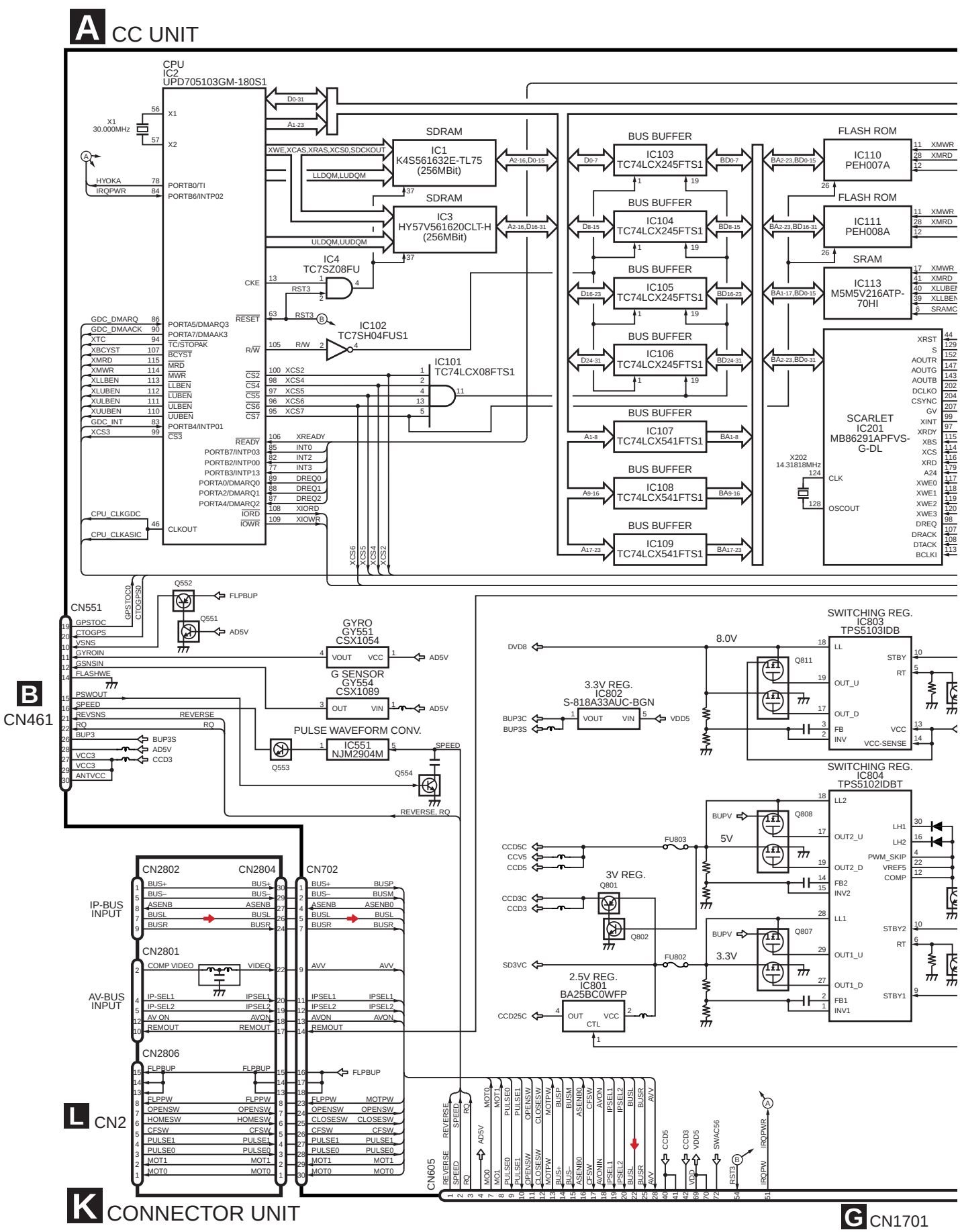

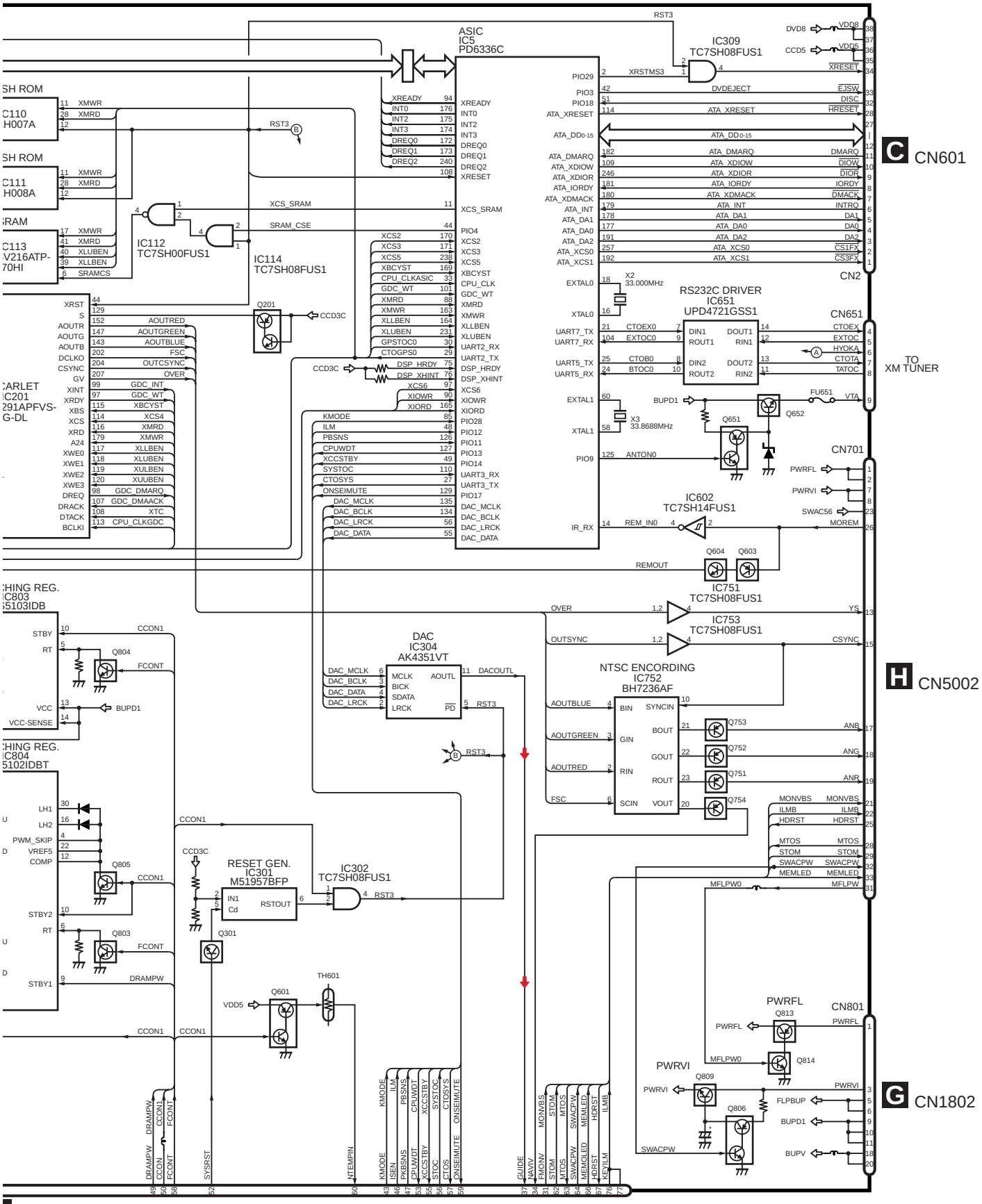
ASIC
IC5
PD6336C
IC309
TC7SH08FUS1
CN601
CN2
RS232C DRIVER
IC651
UPD4721GSS1
CN651
TO
XM TUNER
IC112
TC7SH00FUS1
IC114
TC7SH08FUS1
IC602
TC7SH14FUS1
CN701
IC751
TC7SH08FUS1
IC753
TC7SH08FUS1
DAC
IC304
AK4351VT
NTSC ENCORDING
IC752
BH7236AF
CN5002
RESET GEN.
IC301
M51957BFP
IC302
TC7SH08FUS1
PWRFL
CN801
PWRVI
CN1802
CN1701

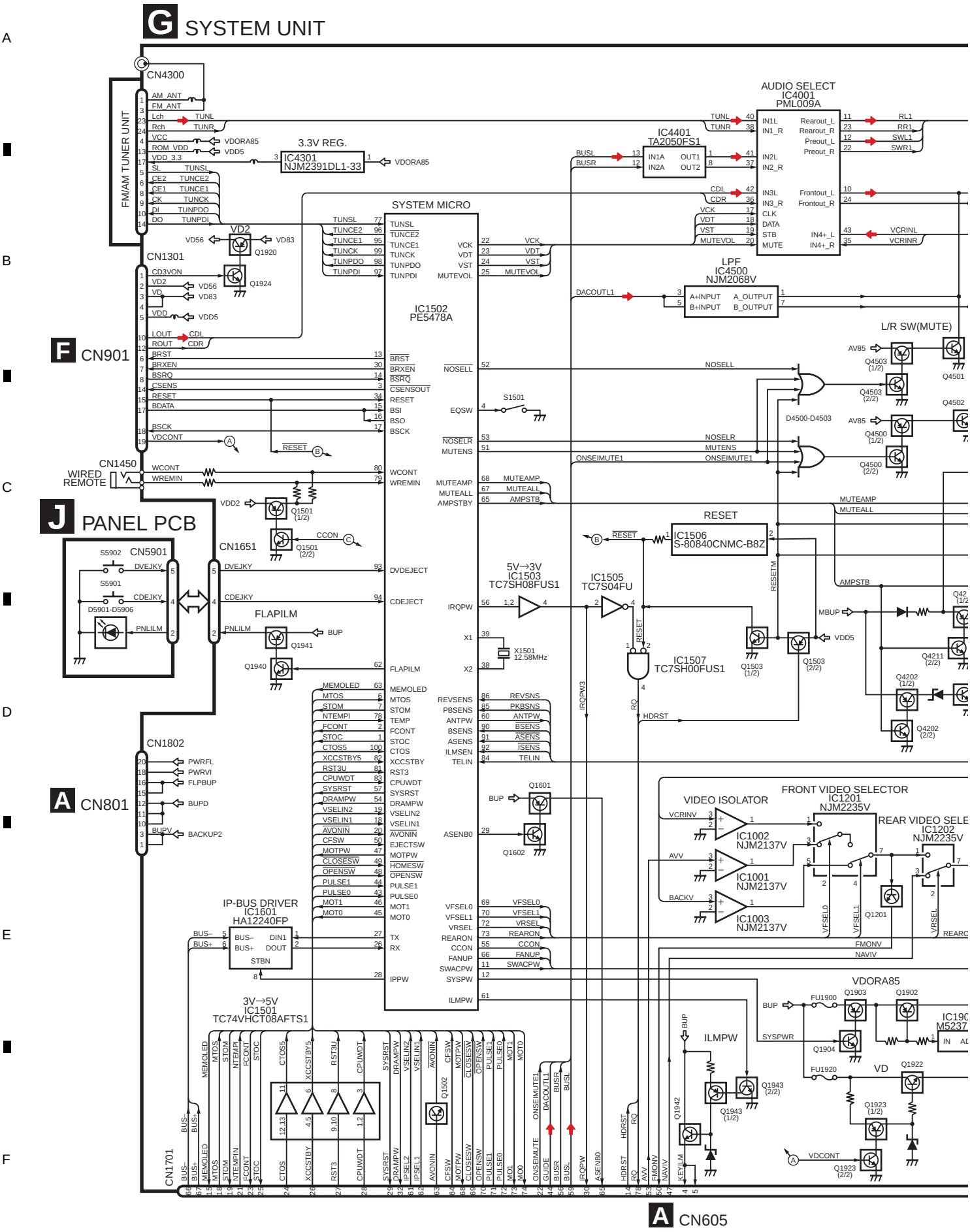
G SYSTEM UNIT
F CN901
J PANEL PCB
A CN801
A CN605
CN4300
FM/AM TUNER UNIT
CN1301
CN1450
WIRED REMOTE
CN1651
CN5901
CN1802
CN1701
3.3V REG.
IC4301
NJM2391DL1-33
SYSTEM MICRO
IC1502
PE5478A
AUDIO SELECT
IC4001
PML009A
IC4401
TA2050FS1
LPF
IC4500
NJM2068V
L/R SW(MUTE)
RESET
IC1506
S-80840CNMC-B8Z
5V→3V
IC1503
TC7SH08FUS1
IC1505
TC7S04FU
IC1507
TC7SH00FUS1
FLAPILM
IP-BUS DRIVER
IC1601
HA12240FP
3V→5V
IC1501
TC74VHCT08AFTS1
VIDEO ISOLATOR
FRONT VIDEO SELECTOR
IC1201
NJM2235V
REAR VIDEO SELE
IC1202
NJM2235V
IC1002
NJM2137V
IC1001
NJM2137V
IC1003
NJM2137V
VDORA85
ILMPW
VD

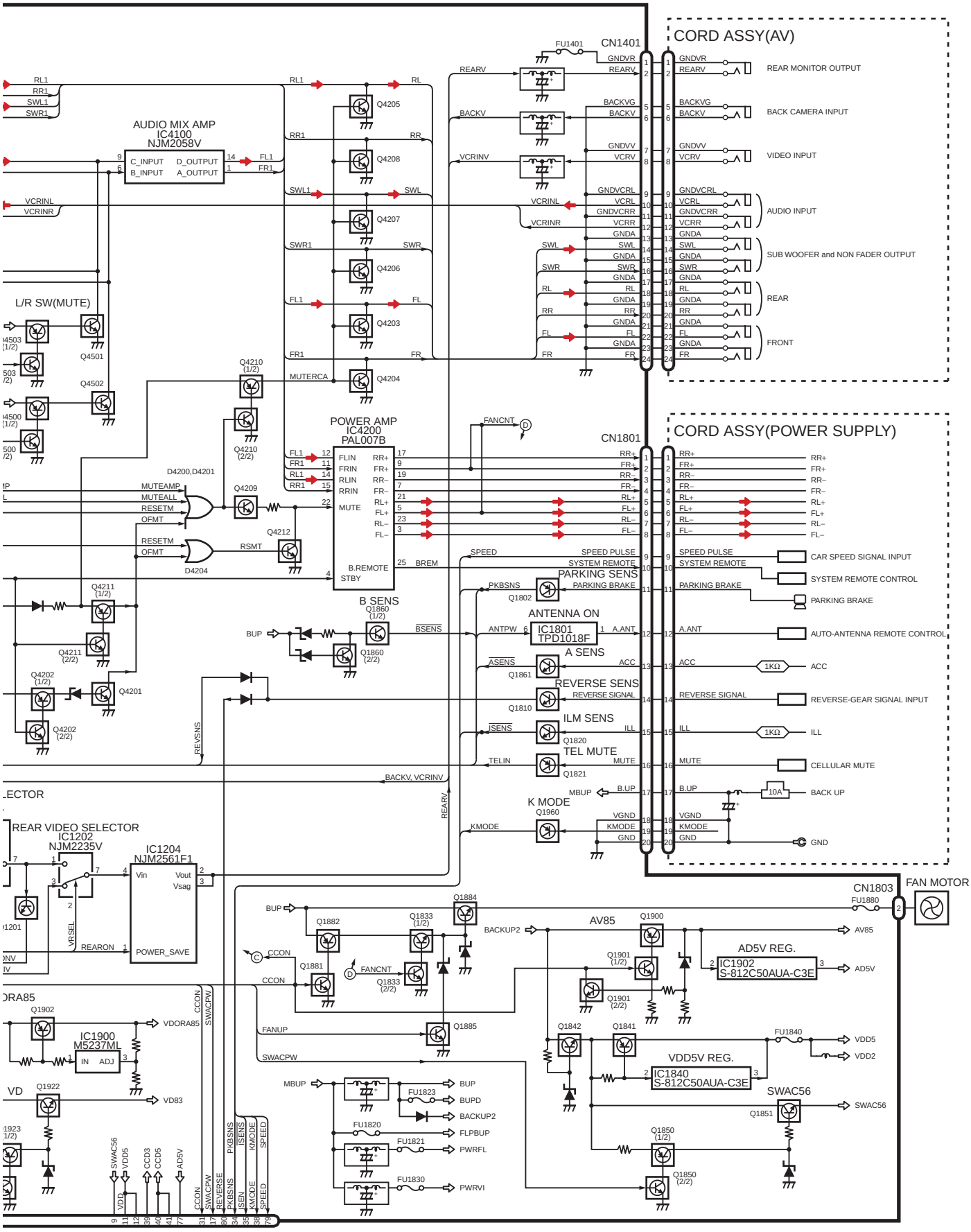
CORD ASSY(AV)
CN1401
FU1401
REAR MONITOR OUTPUT
BACK CAMERA INPUT
VIDEO INPUT
AUDIO INPUT
SUB WOOFER and NON FADER OUTPUT
REAR
FRONT
AUDIO MIX AMP
IC4100
NJM2058V
C_INPUT
B_INPUT
D_OUTPUT
A_OUTPUT
L/R SW(MUTE)
POWER AMP
IC4200
PAL007B
CORD ASSY(POWER SUPPLY)
CN1801
CAR SPEED SIGNAL INPUT
SYSTEM REMOTE CONTROL
PARKING BRAKE
AUTO-ANTENNA REMOTE CONTROL
ACC
REVERSE-GEAR SIGNAL INPUT
ILL
CELLULAR MUTE
BACK UP
GND
PARKING SENS
B SENS
ANTENNA ON
IC1801
TPD1018F
A SENS
REVERSE SENS
ILM SENS
TEL MUTE
K MODE
REAR VIDEO SELECTOR
IC1202
NJM2235V
IC1204
NJM2561F1
POWER_SAVE
CN1803
FAN MOTOR
AV85
AD5V REG.
IC1902
S-812C50AUA-C3E
IC1900
M5237ML
VDD5V REG.
IC1840
S-812C50AUA-C3E
SWAC56
VDD5
VDD2
VDORA85
VD83
BUP
BUPD
BACKUP2
FLPBUP
PWRFL
PWRVI

H MONITOR PCB

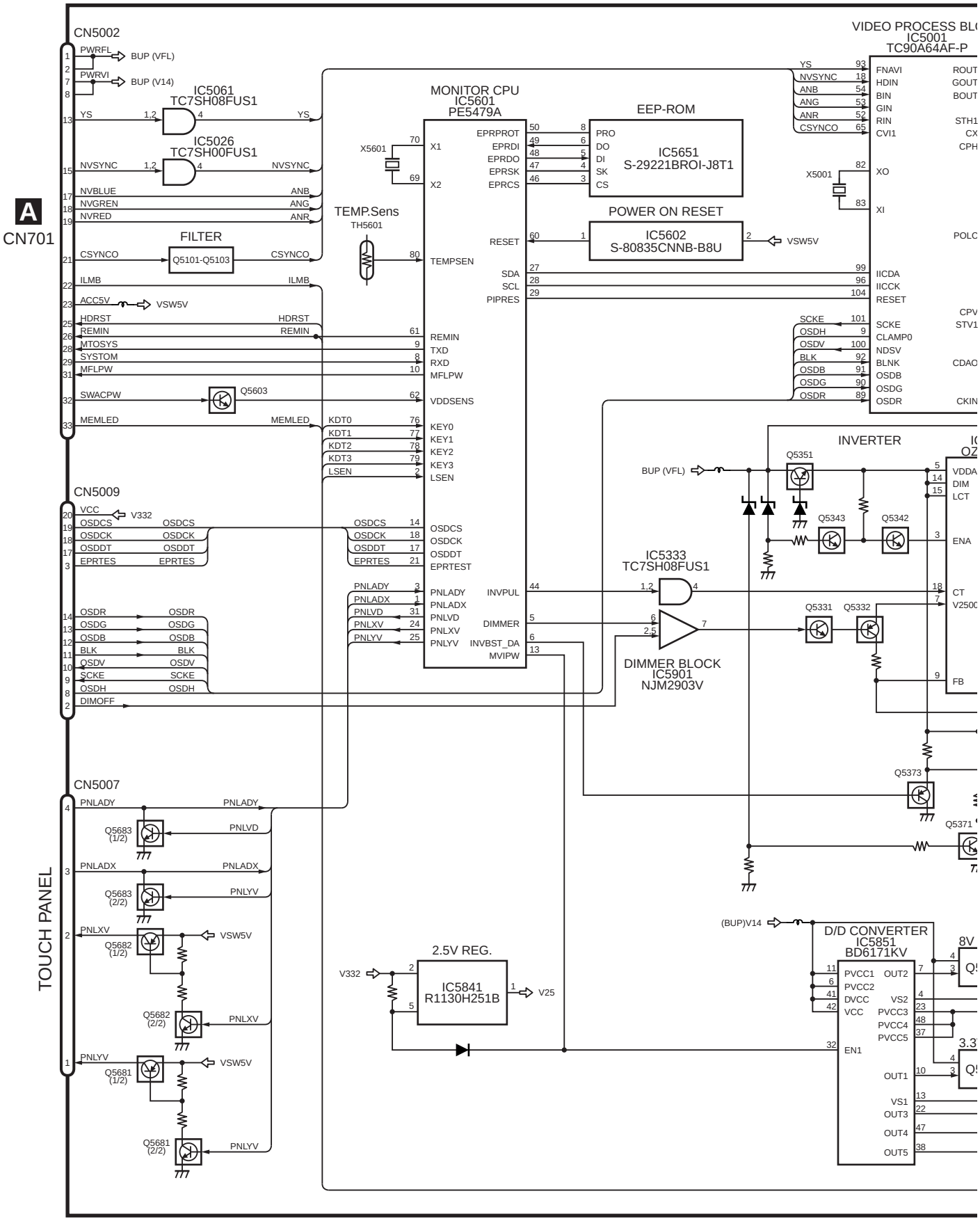

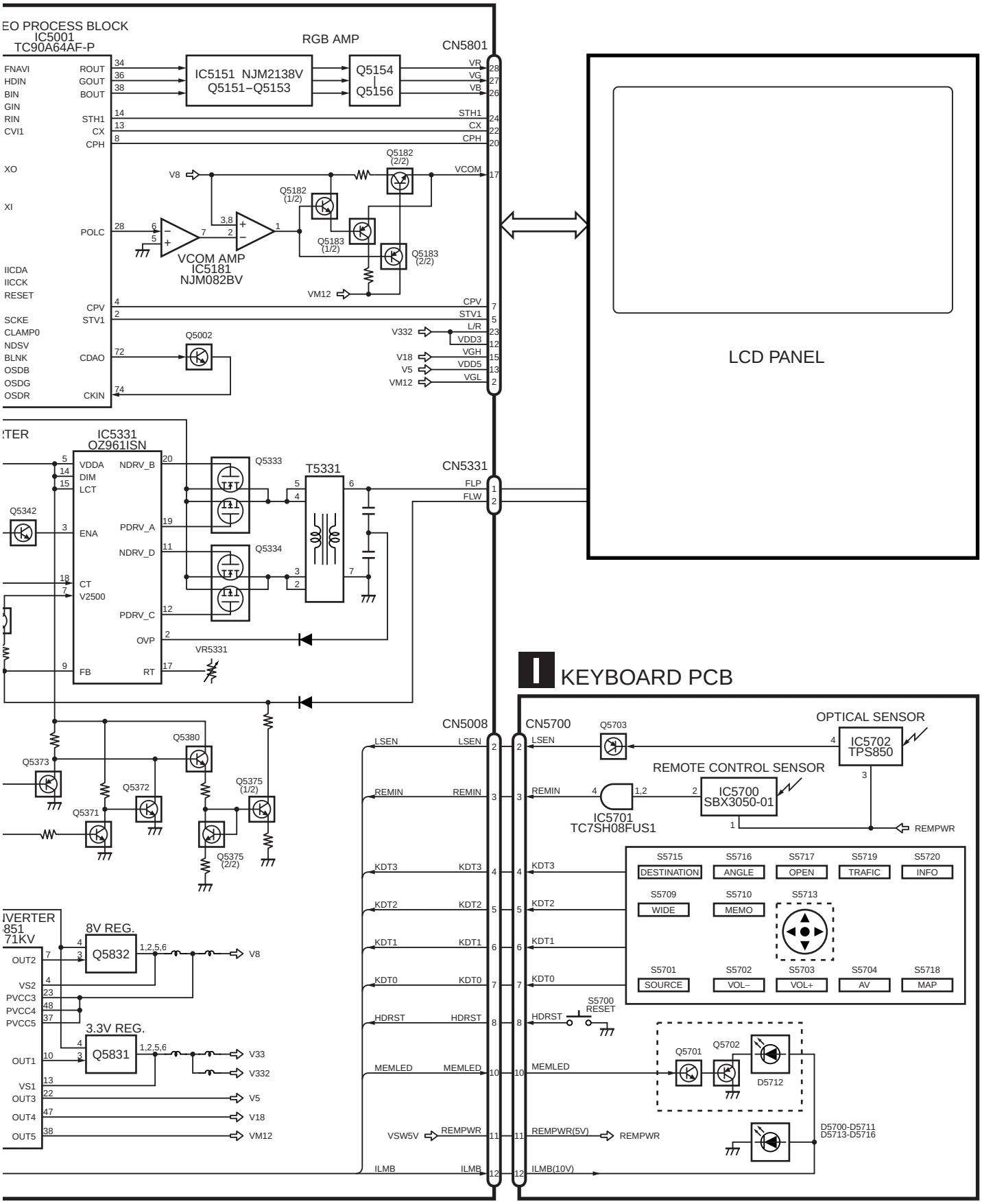
EO PROCESS BLOCK
IC5001
TC90A64AF-P
RGB AMP
IC5151 NJM2138V
Q5151–Q5153
Q5154
Q5156
CN5801
FNAVI
HDIN
BIN
GIN
RIN
CVI1
XO
XI
IICDA
IICCK
RESET
SCKE
CLAMP0
NDSV
BLNK
OSDB
OSDG
OSDR
ROUT
GOUT
BOUT
STH1
CX
CPH
POLC
CPV
STV1
CDAO
CKIN
VR
VG
VB
VCOM
Q5182 (2/2)
Q5182 (1/2)
Q5183 (1/2)
Q5183 (2/2)
VCOM AMP
IC5181
NJM082BV
VM12
V8
Q5002
V332
V18
V5
VDD3
VGH
VDD5
VGL
L/R
LCD PANEL
IC5331
OZ961ISN
VDDA
DIM
LCT
ENA
CT
V2500
FB
NDRV_B
PDRV_A
NDRV_D
PDRV_C
OVP
RT
Q5342
Q5333
Q5334
T5331
CN5331
FLP
FLW
VR5331
Q5373
Q5380
Q5372
Q5371
Q5375 (1/2)
Q5375 (2/2)
KEYBOARD PCB
CN5008
CN5700
Q5703
OPTICAL SENSOR
IC5702
TPS850
REMOTE CONTROL SENSOR
IC5700
SBX3050-01
IC5701
TC7SH08FUS1
REMPWR
LSEN
REMIN
KDT3
KDT2
KDT1
KDT0
HDRST
MEMLED
VSW5V
ILMB
REMPWR(5V)
ILMB(10V)
S5700 RESET
S5715 DESTINATION
S5716 ANGLE
S5717 OPEN
S5719 TRAFIC
S5720 INFO
S5709 WIDE
S5710 MEMO
S5713
S5701 SOURCE
S5702 VOL–
S5703 VOL+
S5704 AV
S5718 MAP
Q5701
Q5702
D5712
D5700-D5711
D5713-D5716
IVERTER
851
71KV
8V REG.
Q5832
3.3V REG.
Q5831
OUT2
VS2
PVCC3
PVCC4
PVCC5
OUT1
VS1
OUT3
OUT4
OUT5
V8
V33
V332
V5
V18
VM12

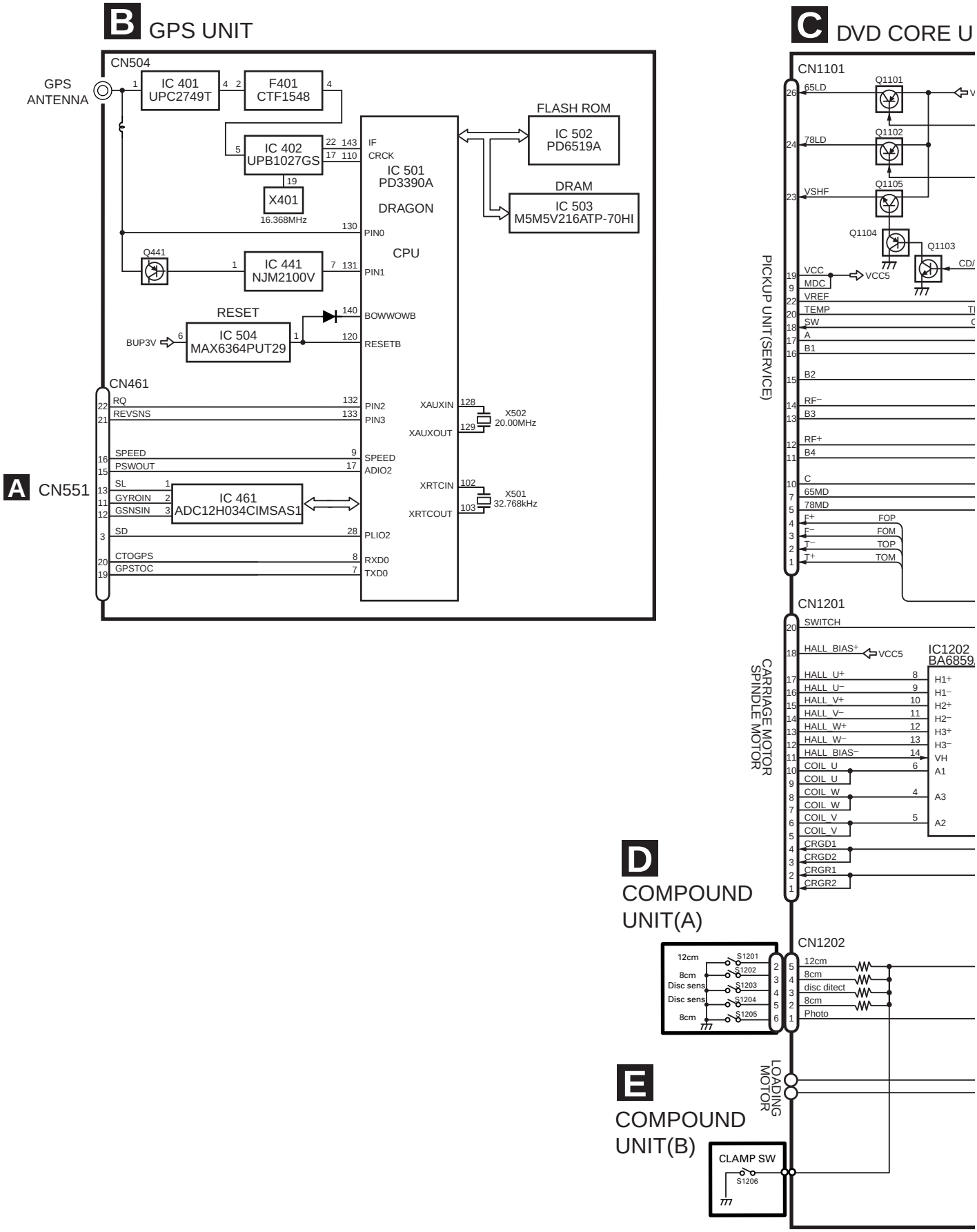
B GPS UNIT
CN504
GPS ANTENNA
IC 401 UPC2749T
F401 CTF1548
IC 402 UPB1027GS
X401
16.368MHz
IC 501 PD3390A
DRAGON
CPU
FLASH ROM
IC 502 PD6519A
DRAM
IC 503 M5M5V216ATP-70HI
Q441
IC 441 NJM2100V
RESET
IC 504 MAX6364PUT29
BUP3V
CN461
CN551
IC 461 ADC12H034CIMSAS1
X502 20.00MHz
X501 32.768kHz
C DVD CORE U
CN1101
PICKUP UNIT(SERVICE)
CN1201
CARRIAGE MOTOR
SPINDLE MOTOR
IC1202 BA6859
D COMPOUND UNIT(A)
CN1202
E COMPOUND UNIT(B)
LOADING MOTOR
CLAMP SW
S1206

D CORE UNIT

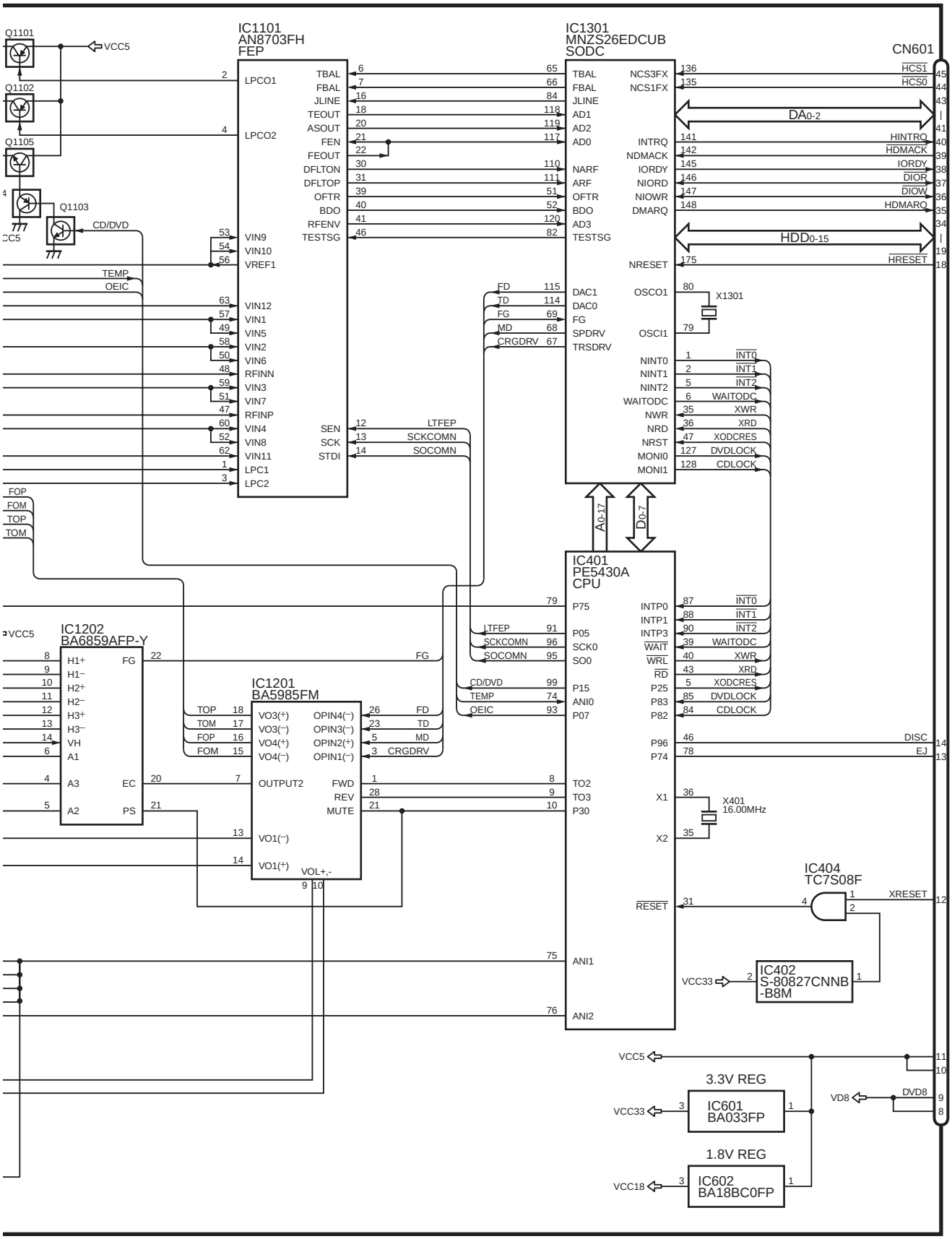
IC1101
AN8703FH
FEP
IC1301
MNZS26EDCUB
SODC
CN601
Q1101
Q1102
Q1105
Q1103
VCC5
CD/DVD
TEMP
OEIC
FOP
FOM
TOP
TOM
DA0-2
HDD0-15
A0-17
D0-7
X1301
IC401
PE5430A
CPU
A CN2
IC1202
BA6859AFP-Y
IC1201
BA5985FM
X401
16.00MHz
IC404
TC7S08F
XRESET
IC402
S-80827CNNB
-B8M
VCC33
3.3V REG
IC601
BA033FP
VD8
DVD8
1.8V REG
VCC18
IC602
BA18BC0FP

L MAIN PCB UNIT

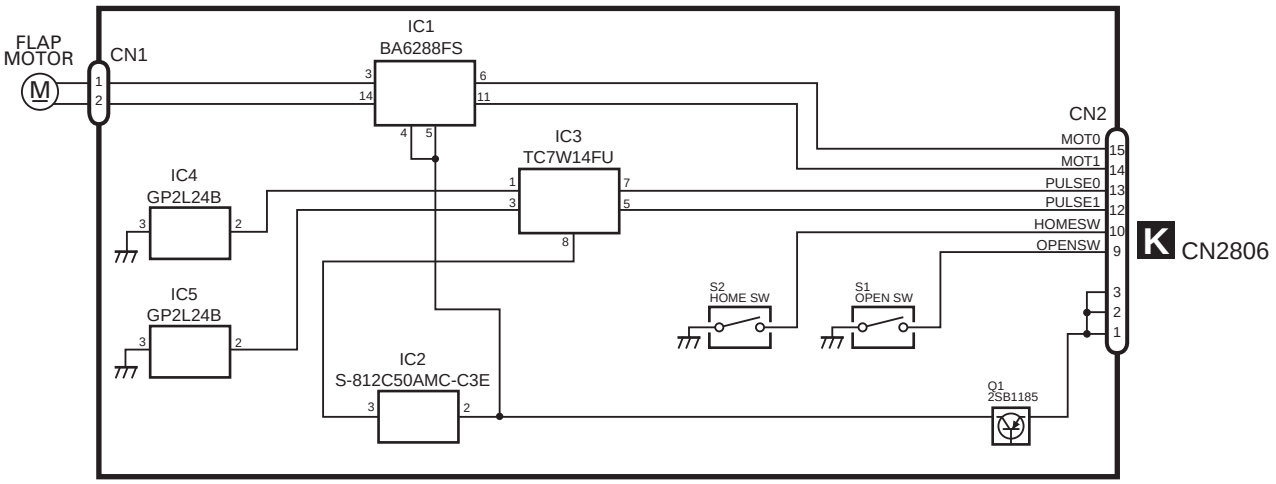

FM/AM TUNER UNIT

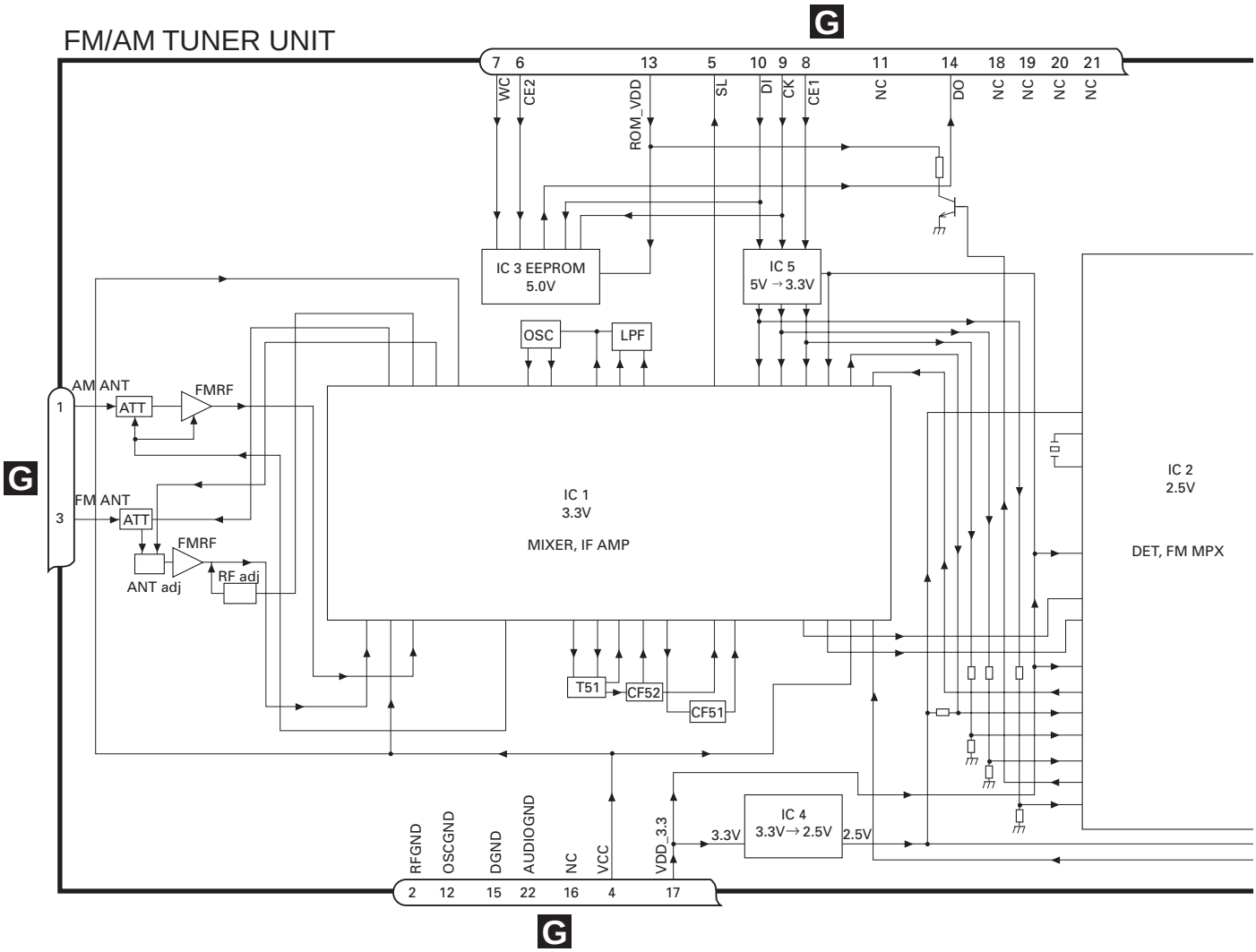

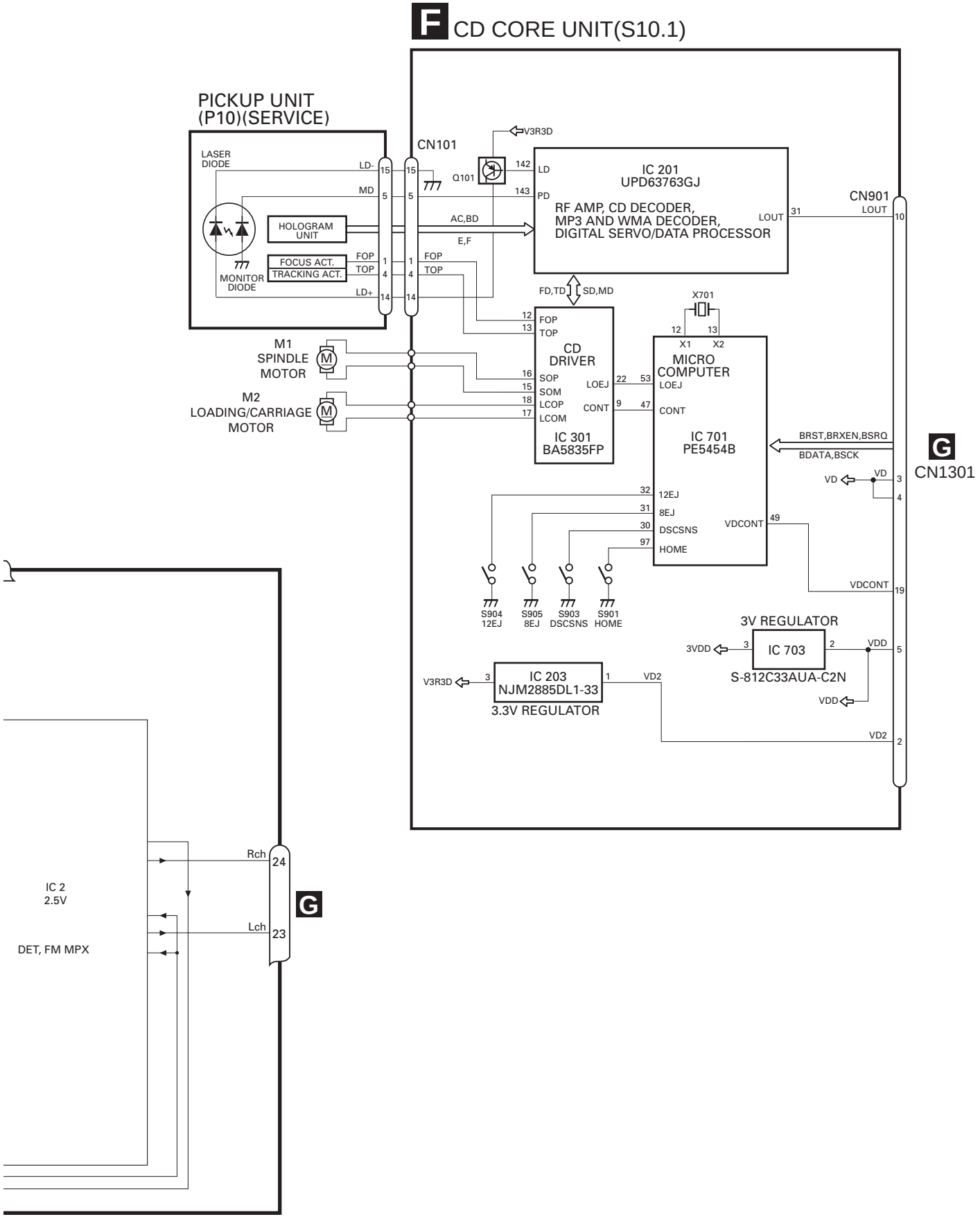
F CD CORE UNIT(S10.1)
PICKUP UNIT
(P10)(SERVICE)
LASER DIODE
LD-
MD
HOLOGRAM UNIT
FOCUS ACT.
TRACKING ACT.
FOP
TOP
LD+
MONITOR DIODE
CN101
V3R3D
Q101
IC 201
UPD63763GJ
RF AMP, CD DECODER,
MP3 AND WMA DECODER,
DIGITAL SERVO/DATA PROCESSOR
LD
PD
LOUT
AC,BD
E,F
FD,TD
SD,MD
CN901
M1
SPINDLE
MOTOR
M2
LOADING/CARRIAGE
MOTOR
CD
DRIVER
SOP
SOM
LCOP
LCOM
LOEJ
CONT
IC 301
BA5835FP
X701
X1
X2
MICRO
COMPUTER
IC 701
PE5454B
BRST,BRXEN,BSRQ
BDATA,BSCK
VD
G
CN1301
12EJ
8EJ
DSCSNS
HOME
VDCONT
S904
12EJ
S905
8EJ
S903
DSCSNS
S901
HOME
3V REGULATOR
3VDD
IC 703
S-812C33AUA-C2N
VDD
IC 203
NJM2885DL1-33
3.3V REGULATOR
VD2
IC 2
2.5V
DET, FM MPX
Rch
Lch
G

● Power supply system figure

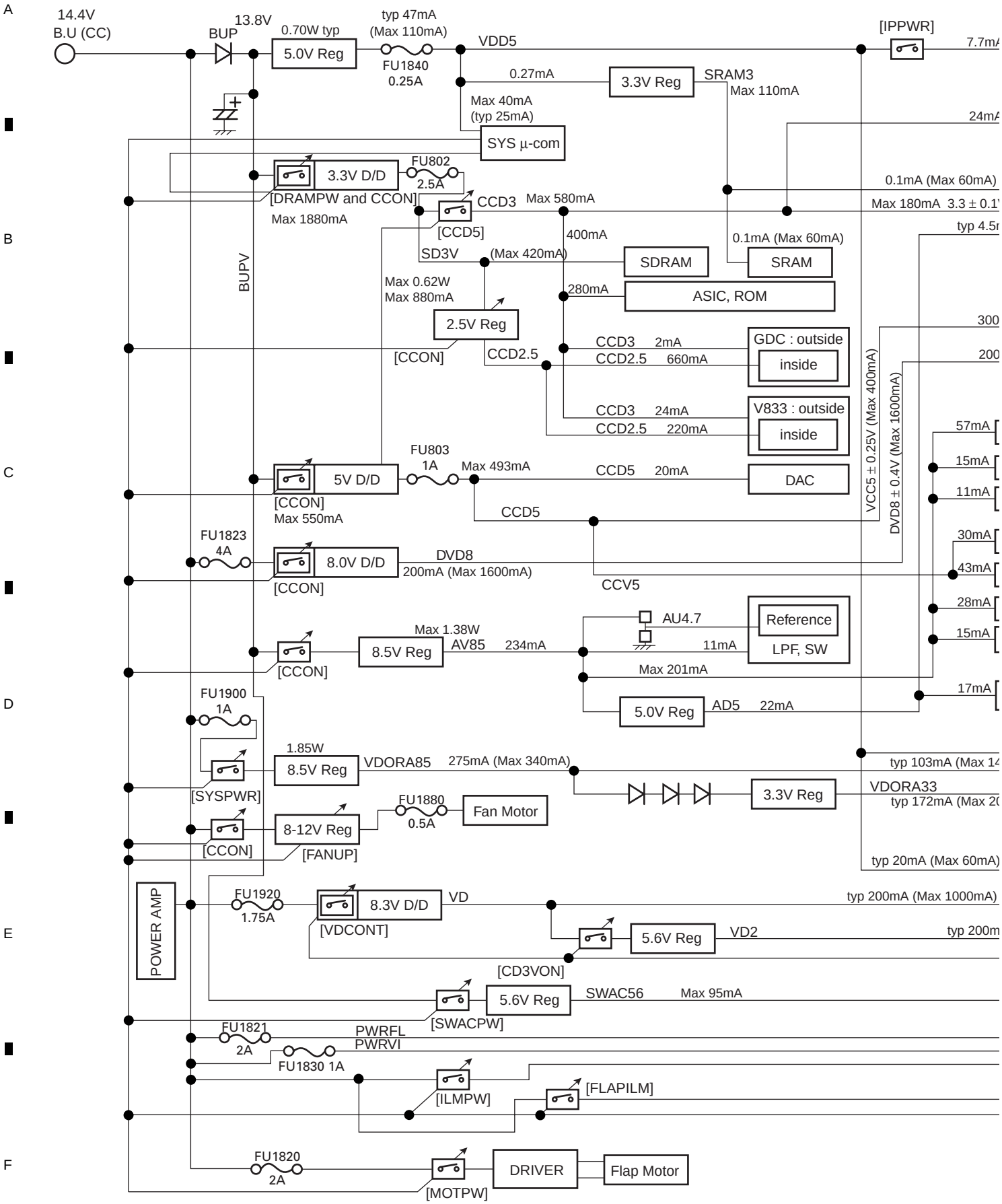

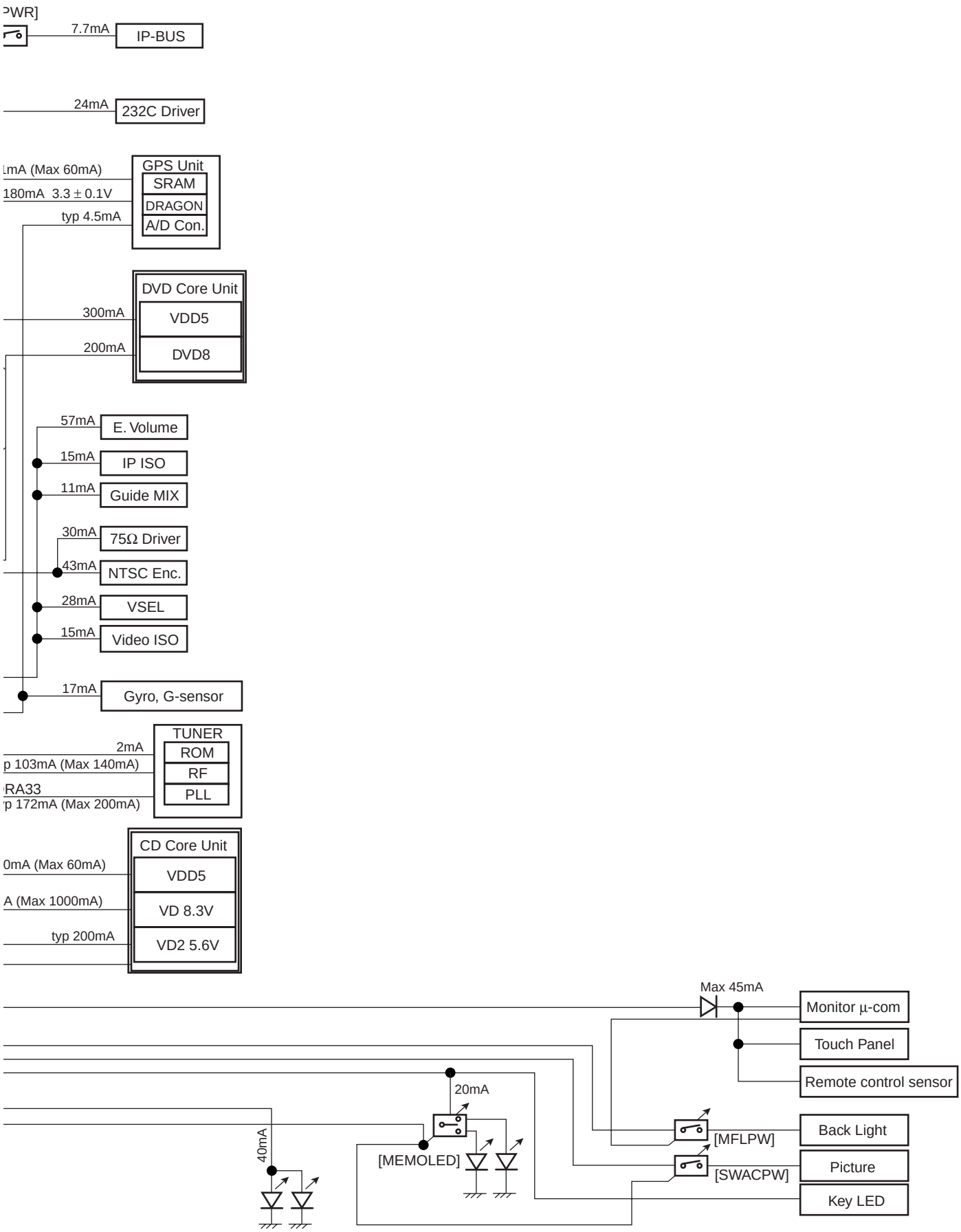
PWR]
7.7mA
IP-BUS
24mA
232C Driver
mA (Max 60mA)
180mA 3.3 ± 0.1V
typ 4.5mA
GPS Unit
SRAM
DRAGON
A/D Con.
DVD Core Unit
300mA
VDD5
200mA
DVD8
57mA
E. Volume
15mA
IP ISO
11mA
Guide MIX
30mA
75Ω Driver
43mA
NTSC Enc.
28mA
VSEL
15mA
Video ISO
17mA
Gyro, G-sensor
TUNER
2mA
ROM
p 103mA (Max 140mA)
RF
RA33
PLL
p 172mA (Max 200mA)
CD Core Unit
0mA (Max 60mA)
VDD5
A (Max 1000mA)
VD 8.3V
typ 200mA
VD2 5.6V
Max 45mA
Monitor µ-com
Touch Panel
Remote control sensor
20mA
Back Light
[MFLPW]
40mA
[MEMOLED]
Picture
[SWACPW]
Key LED

3.2 OVERALL CONNECTION DIAGRAM

Note: When ordering service parts, be sure to refer to " EXPLODED VIEWS AND PARTS LIST" or "ELECTRICAL PARTS LIST".

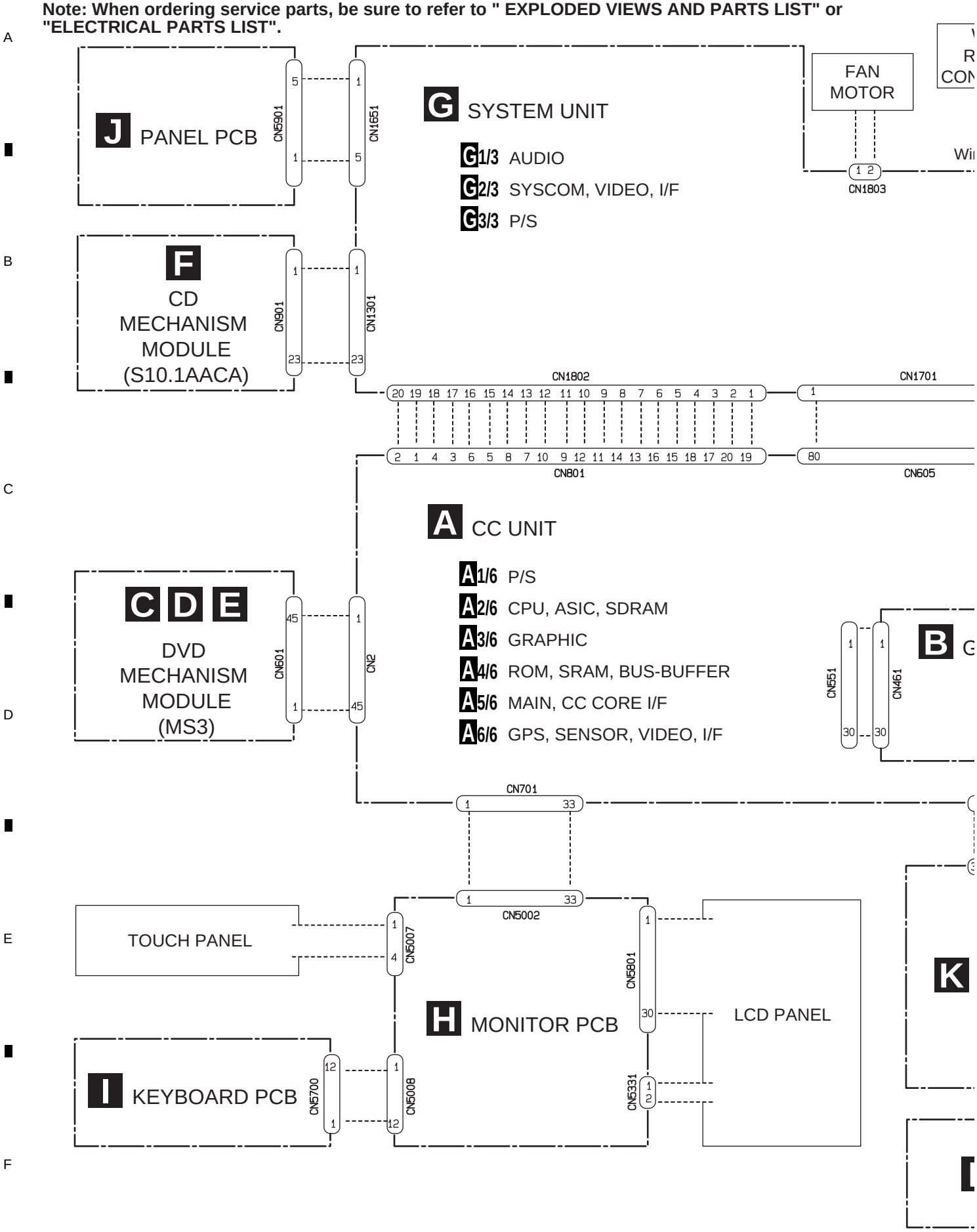

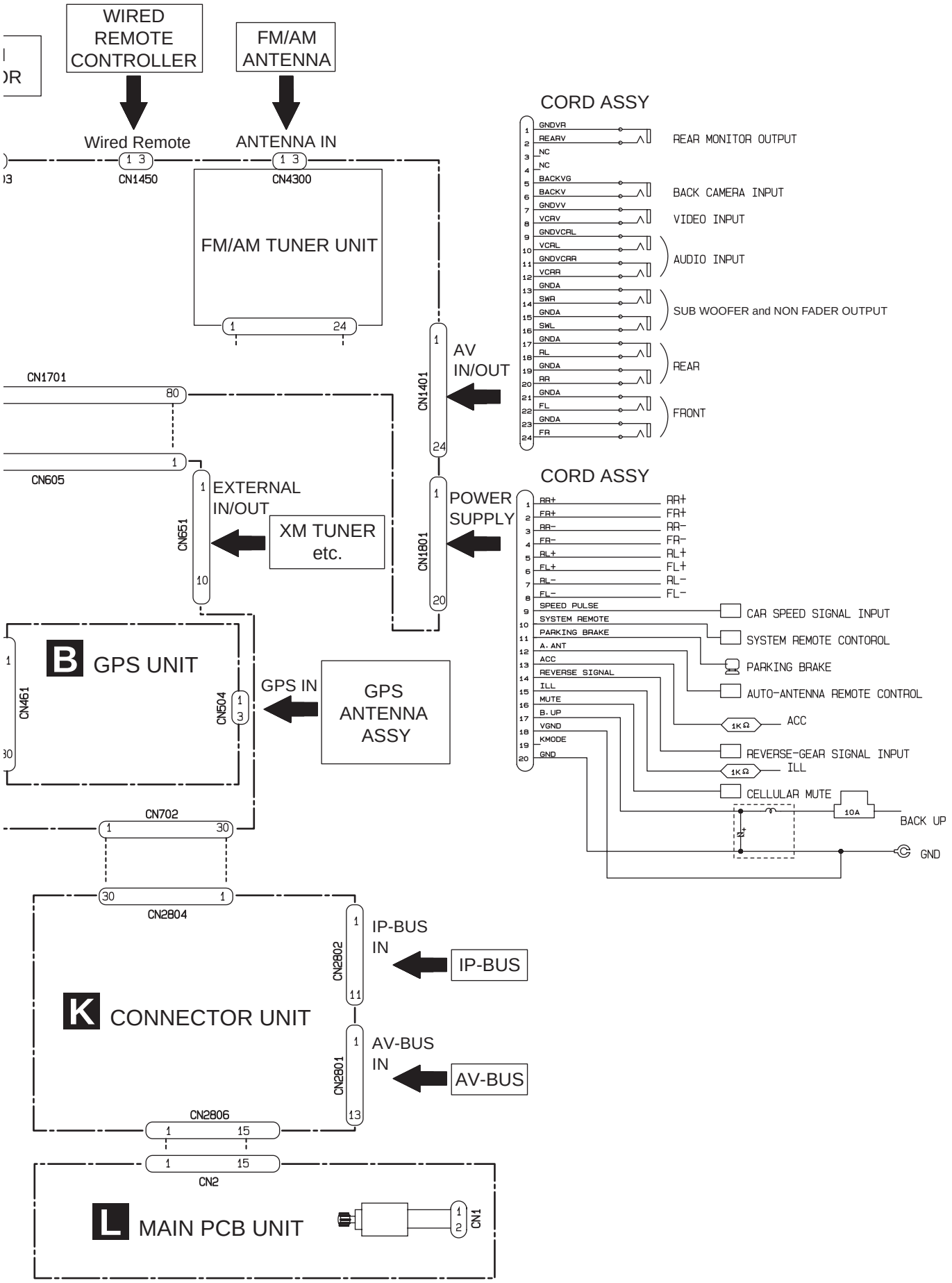
WIRED REMOTE CONTROLLER
FM/AM ANTENNA
Wired Remote
ANTENNA IN
CN1450
CN4300
FM/AM TUNER UNIT
CORD ASSY
GNDVR
REARV
NC
NC
BACKVG
BACKV
GNDVV
VCRV
GNDVCRL
VCRL
GNDVCRR
VCRR
GNDA
SWR
GNDA
SWL
GNDA
RL
GNDA
RR
GNDA
FL
GNDA
FR
REAR MONITOR OUTPUT
BACK CAMERA INPUT
VIDEO INPUT
AUDIO INPUT
SUB WOOFER and NON FADER OUTPUT
REAR
FRONT
AV IN/OUT
CN1401
CN1701
CN605
EXTERNAL IN/OUT
CN651
XM TUNER etc.
POWER SUPPLY
CN1801
CORD ASSY
RR+
FR+
RR−
FR−
RL+
FL+
RL−
FL−
SPEED PULSE
SYSTEM REMOTE
PARKING BRAKE
A. ANT
ACC
REVERSE SIGNAL
ILL
MUTE
B. UP
VGND
KMODE
GND
CAR SPEED SIGNAL INPUT
SYSTEM REMOTE CONTOROL
PARKING BRAKE
AUTO-ANTENNA REMOTE CONTROL
ACC
REVERSE-GEAR SIGNAL INPUT
ILL
CELLULAR MUTE
10A
BACK UP
GND
B GPS UNIT
CN461
CN504
GPS IN
GPS ANTENNA ASSY
CN702
CN2804
IP-BUS IN
CN2802
IP-BUS
K CONNECTOR UNIT
AV-BUS IN
CN2801
AV-BUS
CN2806
CN2
L MAIN PCB UNIT
CN1

3.3 CC UNIT (P/S)

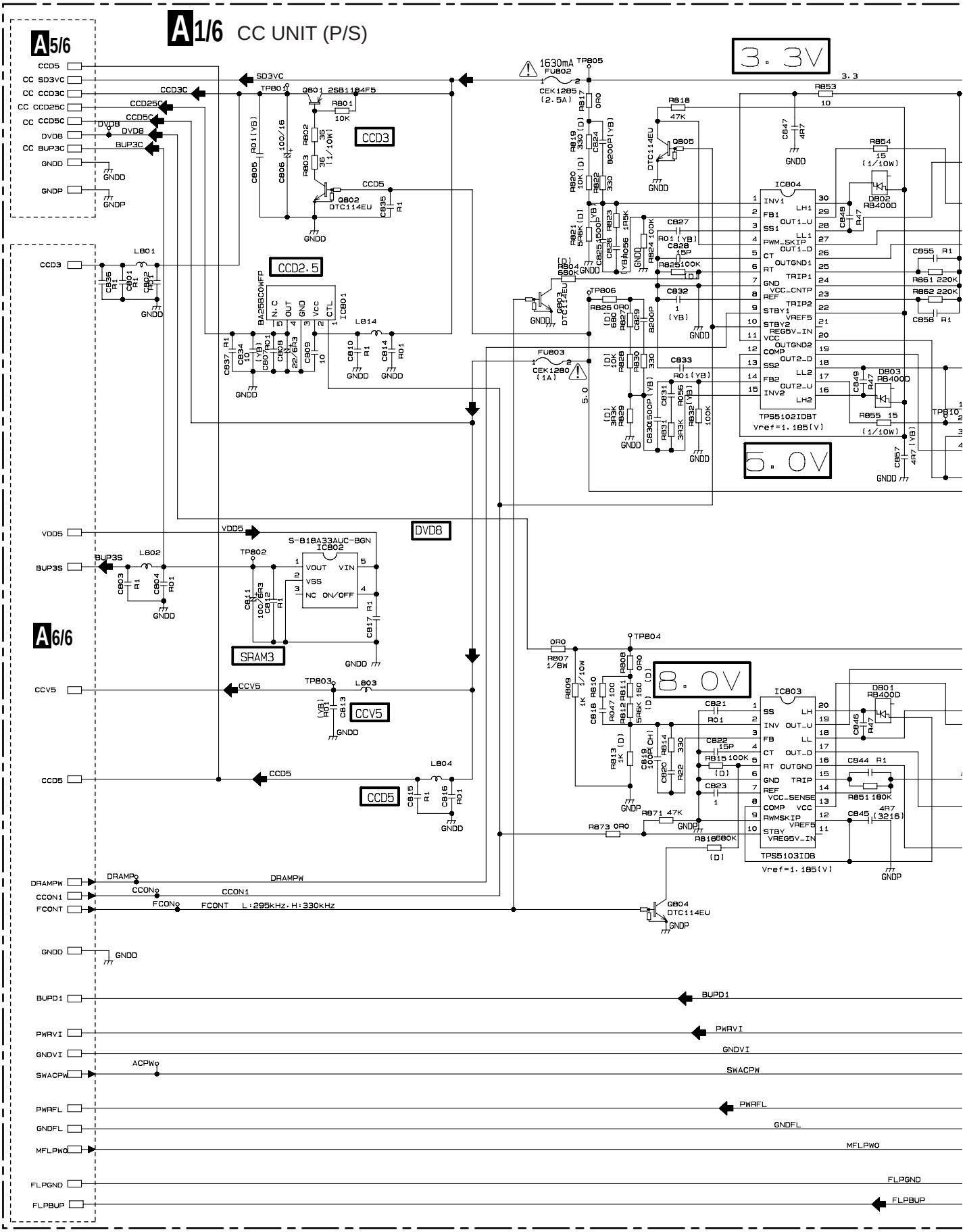

A1/6 CC UNIT (P/S)
A5/6
A6/6
A1/6
3.3V
5.0V
8.0V
CCD3
CCD2.5
DVD8
SRAM3
CCV5
CCD5
IC804
TPS5102IDBT
Vref=1.185(V)
IC803
TPS5103IDB
Vref=1.185(V)
IC801
BA25BC0WFP
IC802
S-818A33AUC-BGN
FU802
CEK1285 (2.5A)
FU803
CEK1280 (1A)
FU801
CEK1280 (1A)
Q801 2SB1184F5
Q802 DTC114EU
Q803 DTC114EU
Q804 DTC114EU
Q805 DTC114EU
D801 RB400D
D802 RB400D
D803 RB400D
SD3VC
CCD3C
CCD25C
CCD5C
DVD8
BUP3C
GNDD
GNDP
VDD5
BUP3S
CCV5
DRAMPW
CCON1
FCONT
FCONT L:295kHz,H:330kHz
BUPD1
PWRVI
GNDVI
SWACPW
ACPW
PWRFL
GNDFL
MFLPWO
FLPGND
FLPBUP

NOTE :

Symbol indicates a resistor.
No differentiation is made between chip resistors and discrete resistors.

Symbol indicates a capacitor.
No differentiation is made between chip capacitors and discrete capacitors.

The ⚠ mark found on some component parts indicates the importance of the safety factor of the part. Therefore, when replacing, be sure to use parts of identical designation.

Decimal points for resistor and capacitor fixed values are expressed as :
2.2→2R2
0.022→R022

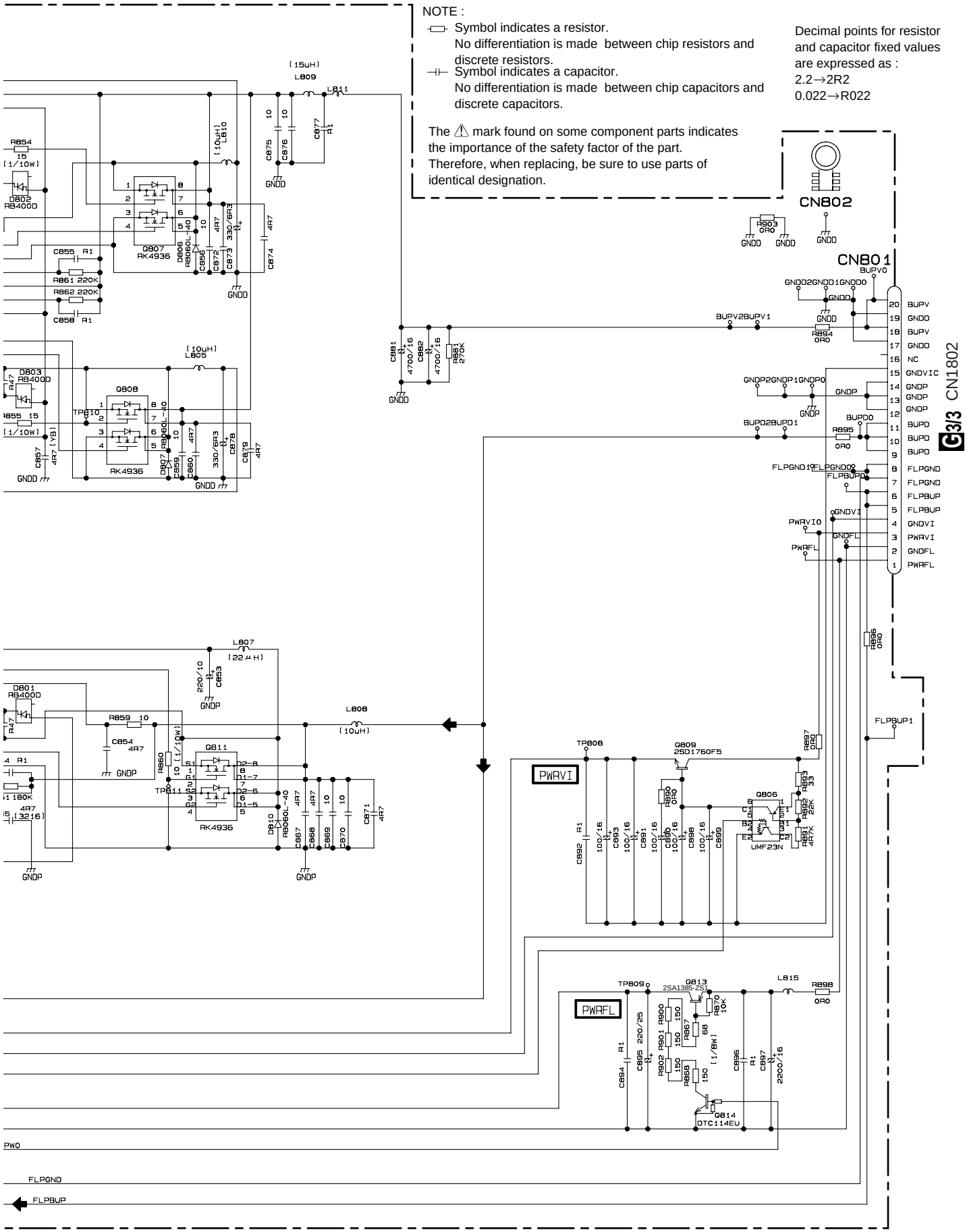

3.4 CC UNIT (CPU, ASIC, SDRAM)(GUIDE PAGE)

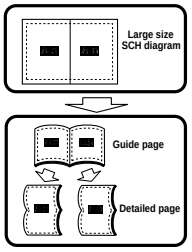

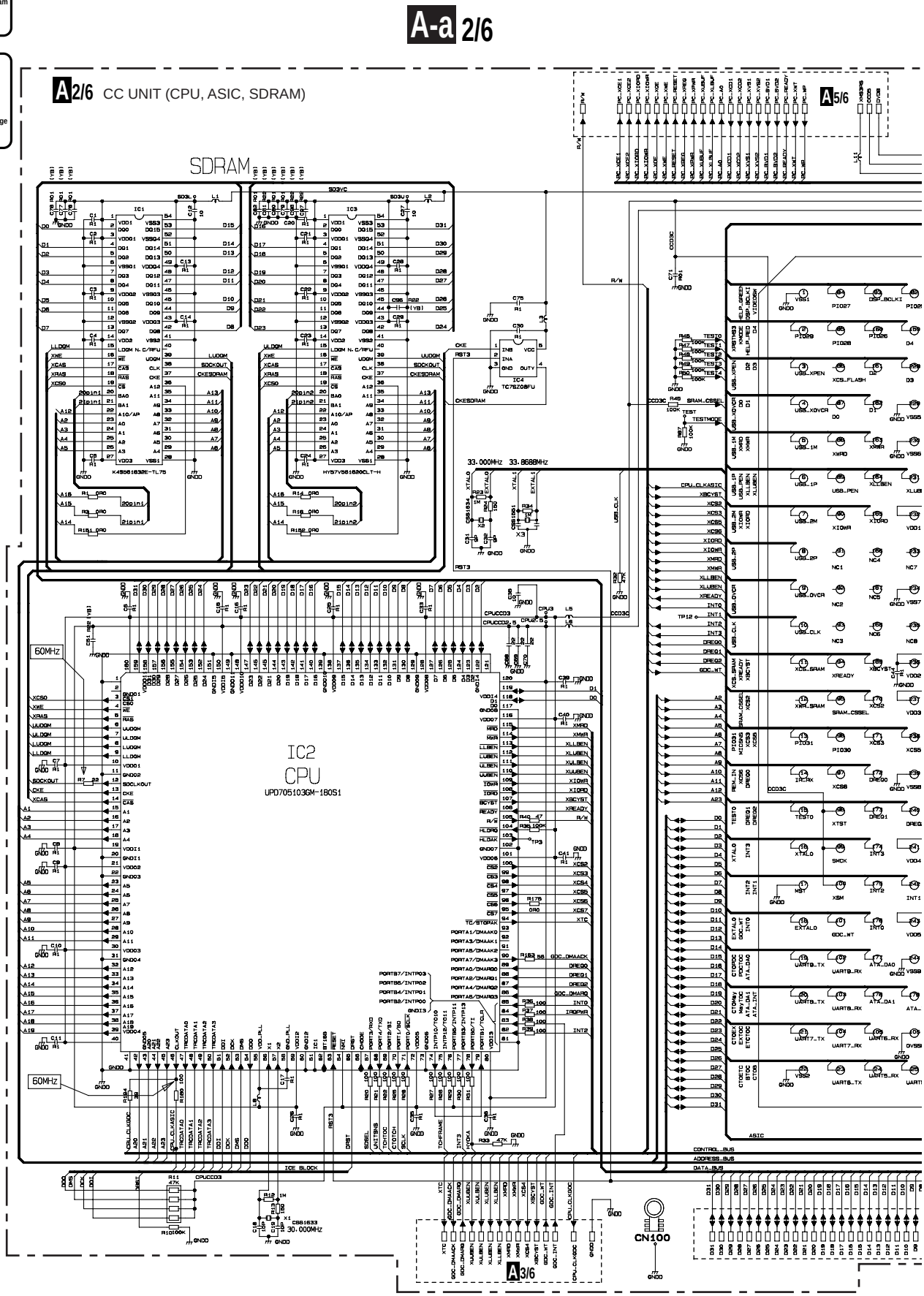

A2/6

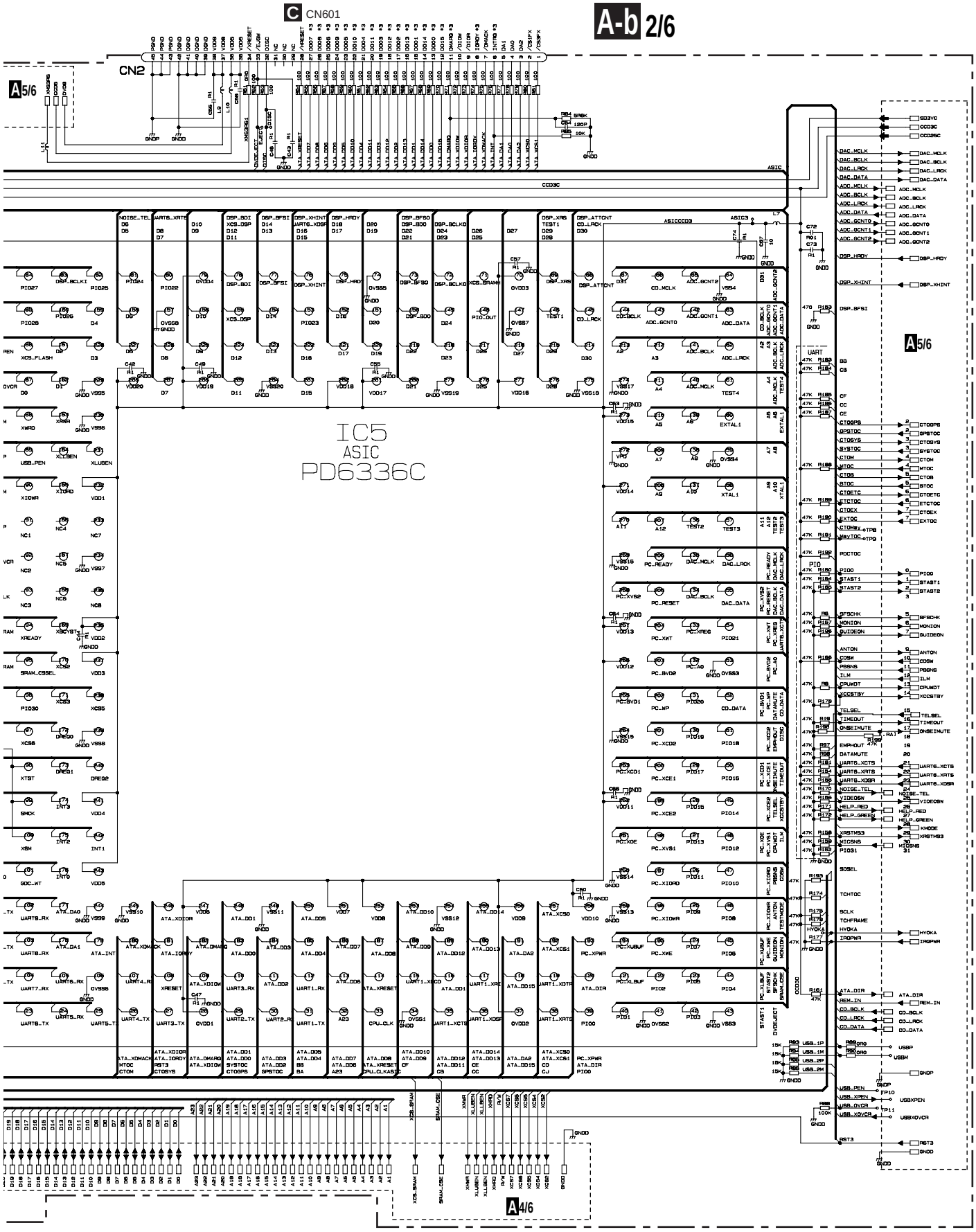
C CN601
A-b 2/6
CN2
A5/6
IC5
ASIC
PD6336C
A4/6
A 2/6

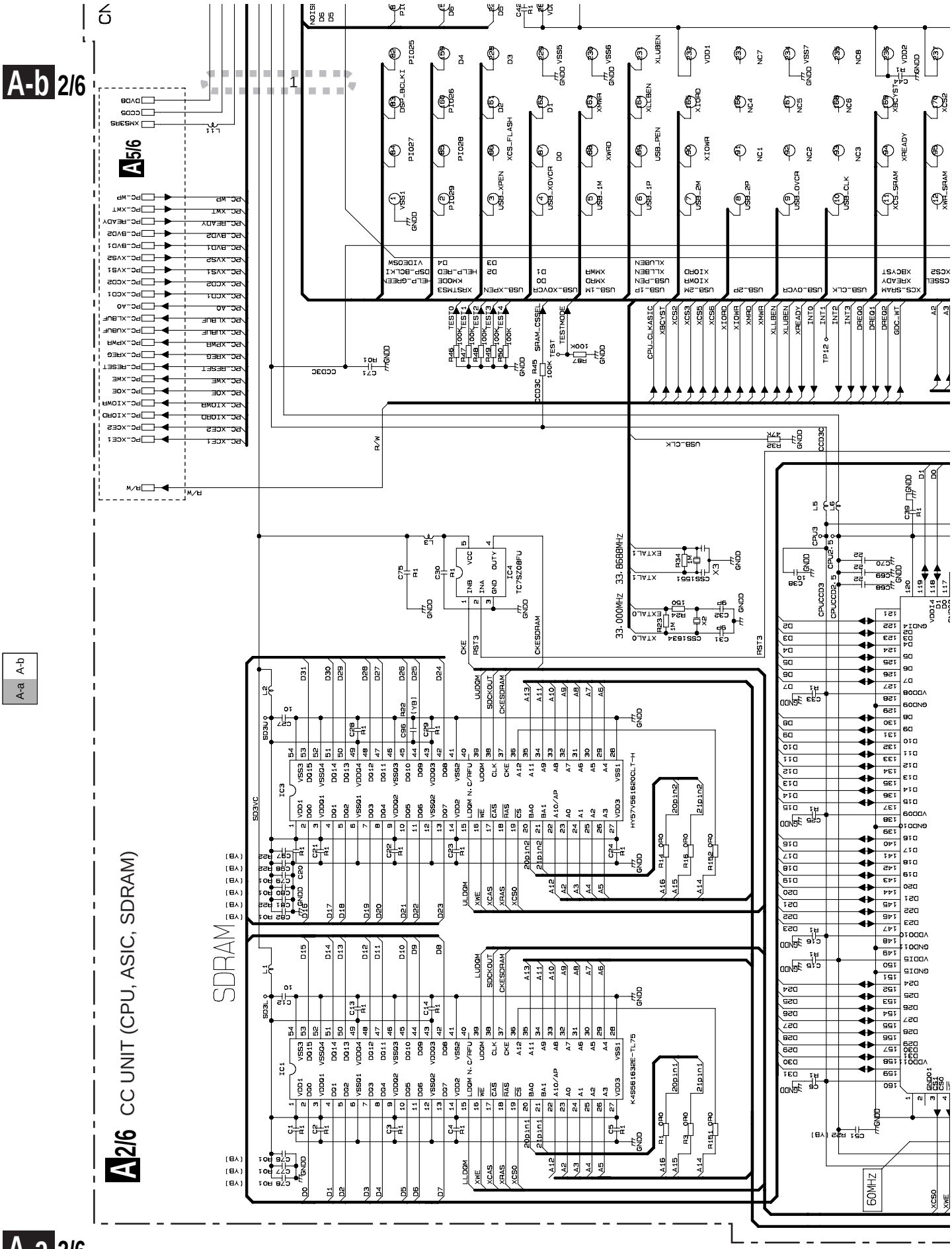
A-b 2/6
A5/6
A2/6 CC UNIT (CPU, ASIC, SDRAM)
SDRAM
A-a 2/6
A-a A-b
33.000MHz 33.8688MHz
60MHz

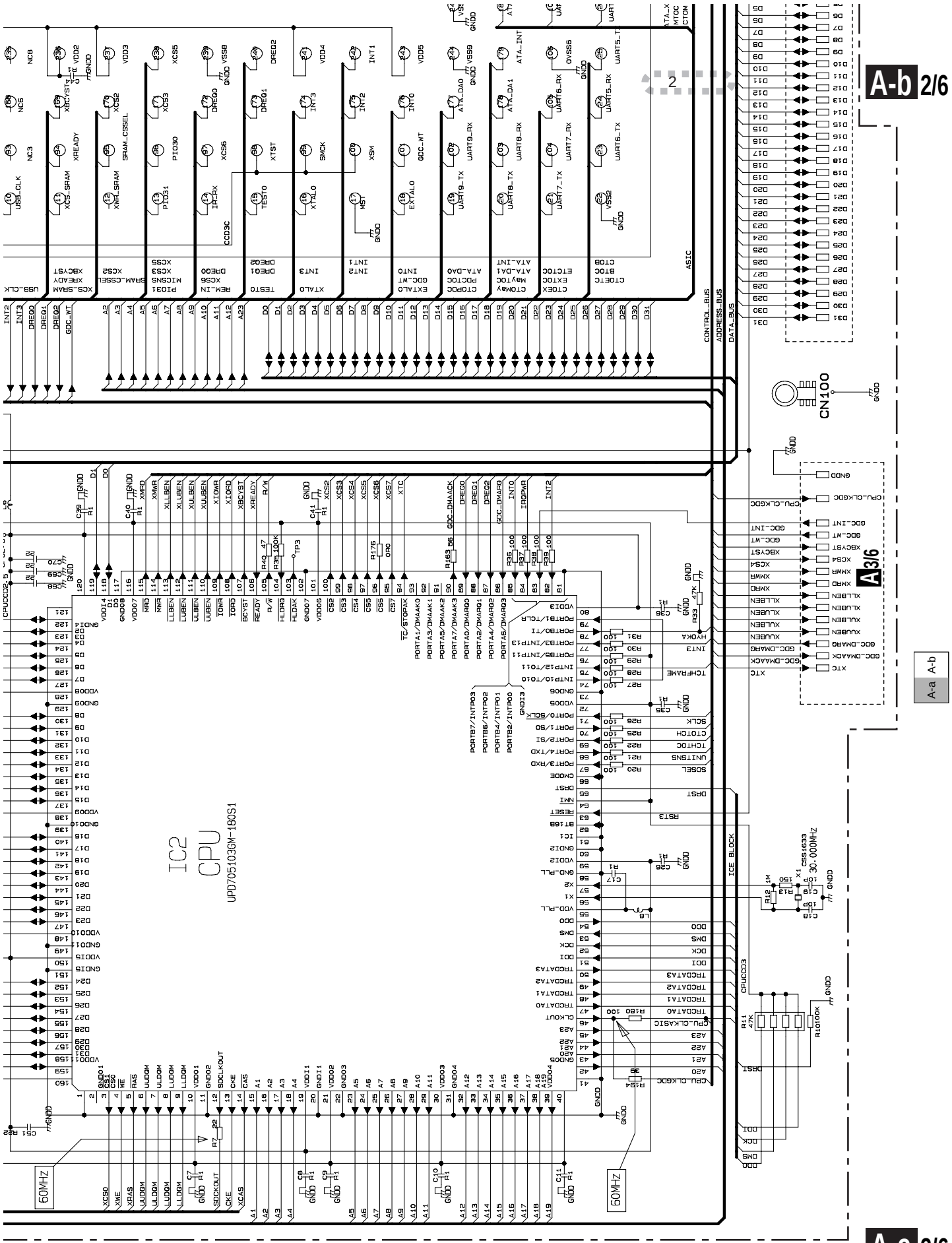
A-b 2/6
A-a 2/6
A3/6
CN100
IC2
CPU
UPD705103GM-180S1
60MHz
60MHz
CSS1633
30.000MHz
ICE BLOCK
CONTROL_BUS
ADDRESS_BUS
DATA_BUS
ASIC

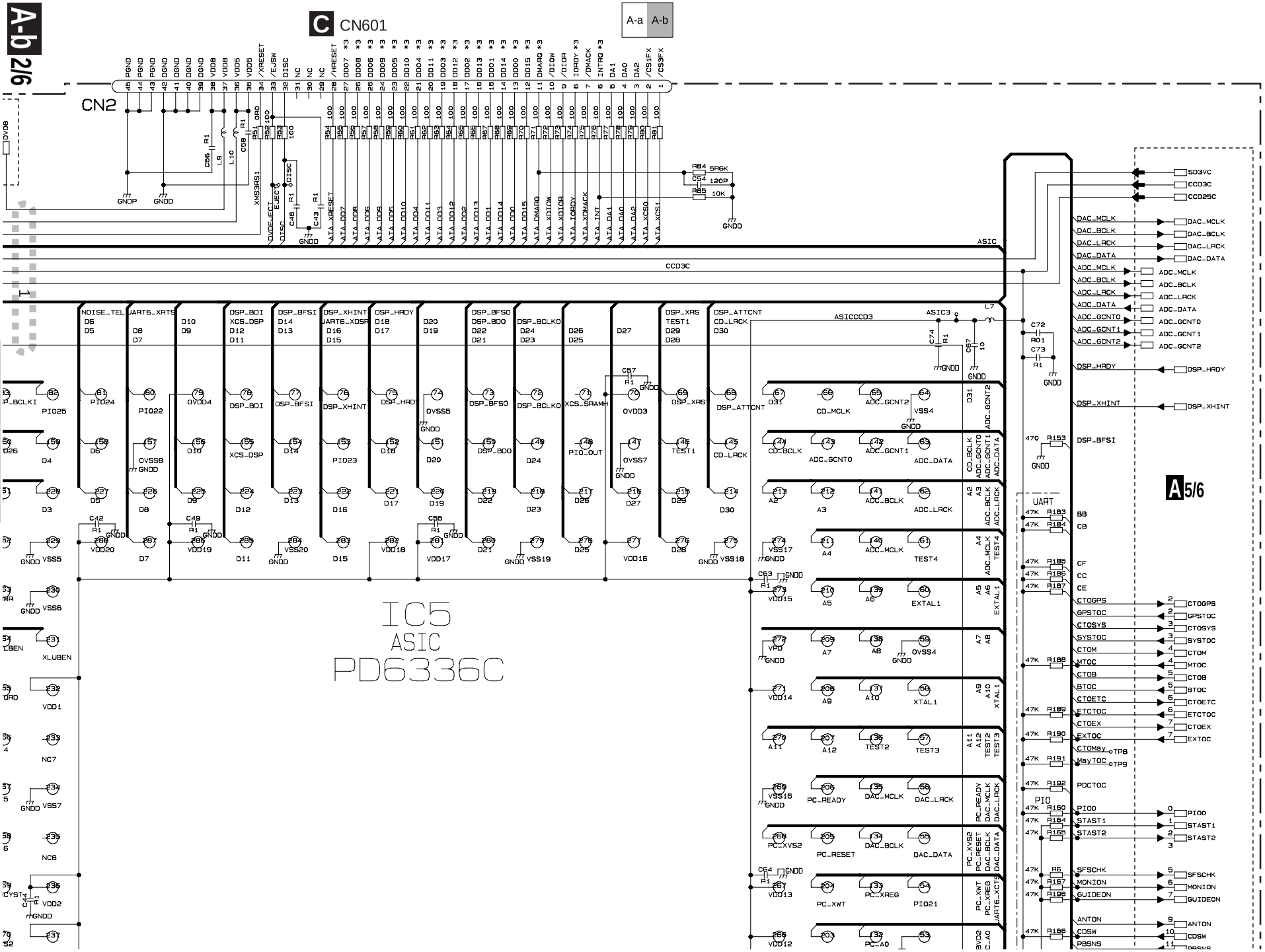
C CN601
A-a A-b
CN2
IC5
ASIC
PD6336C
A 5/6
UART
PIO
ASIC
CCD3C
SD3VC
CCD3C
CCD25C
DAC_MCLK
DAC_BCLK
DAC_LRCK
DAC_DATA
ADC_MCLK
ADC_BCLK
ADC_LRCK
ADC_DATA
ADC_GCNT0
ADC_GCNT1
ADC_GCNT2
DSP_HRDY
DSP_XHINT
DSP_BFSI
CTOGPS
GPSTOC
CTOSYS
SYSTOC
CTOM
MTOC
CTOB
BTOC
CTOETC
ETCTOC
CTOEX
EXTOC
PIO0
STAST1
STAST2
SFSCHK
MONION
GUIDEON
ANTON
CDSW
PBSNS

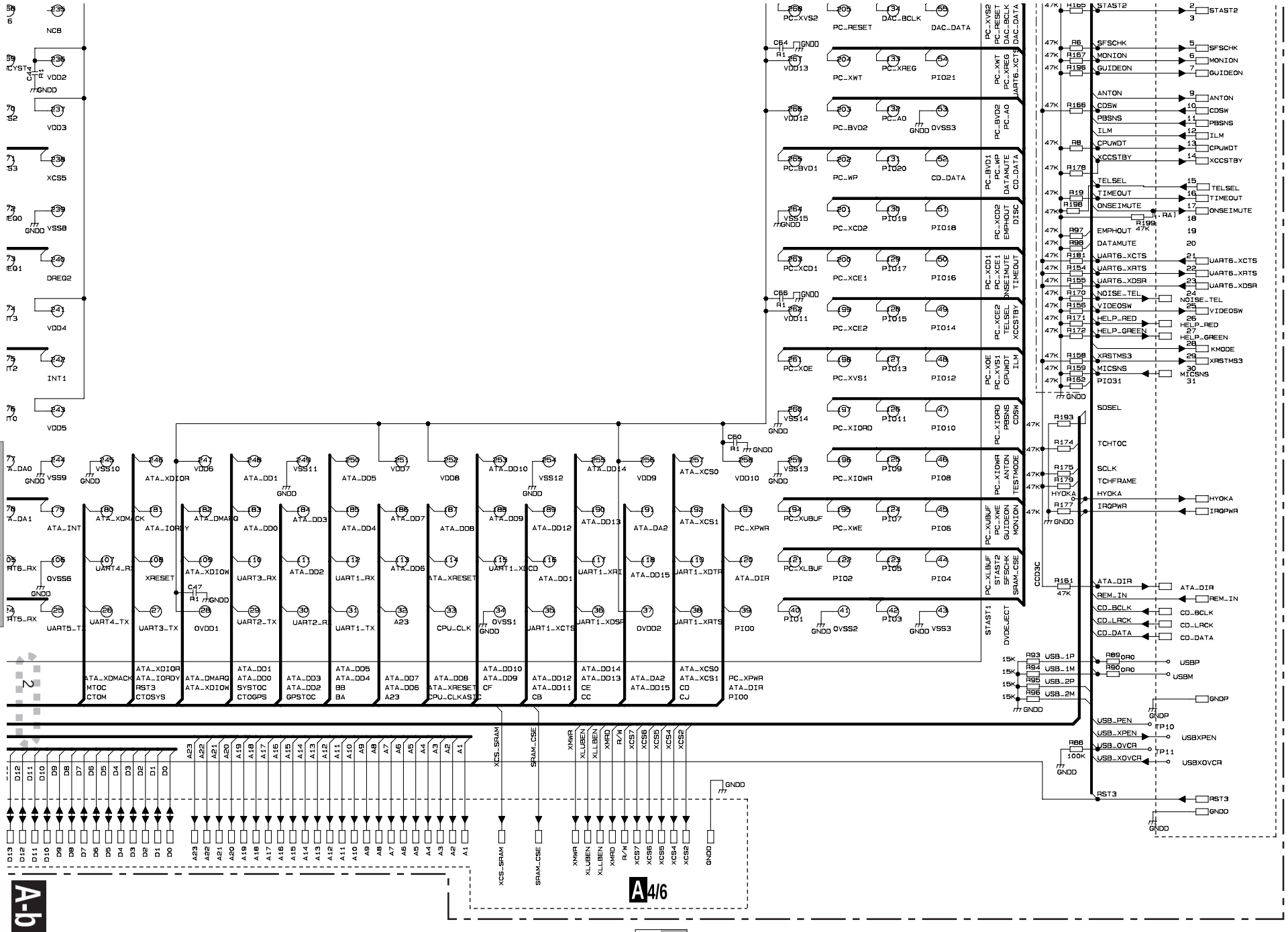
AVIC-D1/UC
A-b 2/6
A 4/6
A-a A-b
NCB
VDD2
VDD3
XCS5
VSS8
DREQ2
VDD4
INT1
VDD5
VSS9
VSS10
VDD6
VSS11
VDD7
VDD8
VSS12
VDD9
VDD10
VSS13
VSS14
VSS15
VDD11
VDD12
VDD13
OVSS3
OVSS6
OVDD1
OVSS1
OVDD2
OVSS2
VSS3
ATA_XDIOR
ATA_DD1
ATA_DD5
ATA_DD10
ATA_DD14
ATA_XCS0
ATA_XDMACK
ATA_IORDY
ATA_DMARQ
ATA_DD0
ATA_DD3
ATA_DD4
ATA_DD7
ATA_DD8
ATA_DD9
ATA_DD12
ATA_DD13
ATA_DA2
ATA_XCS1
PC_XPWR
ATA_INT
UART4_RX
XRESET
ATA_XDIOW
UART3_RX
ATA_DD2
UART1_RX
ATA_DD6
ATA_XRESET
UART1_XDCD
ATA_DD11
UART1_XRI
ATA_DD15
UART1_XDTR
ATA_DIR
UART5_RX
UART4_TX
UART3_TX
UART2_TX
UART2_RX
UART1_TX
A23
CPU_CLK
UART1_XCTS
UART1_XDSR
UART1_XRTS
PIO0
PIO1
PIO3
PC_XVS2
PC_RESET
DAC_BCLK
DAC_DATA
PC_XWT
PC_XREG
PIO21
PC_BVD2
PC_A0
PC_BVD1
PC_WP
PIO20
CD_DATA
PC_XCD2
PIO19
PIO18
PC_XCD1
PC_XCE1
PIO17
PIO16
PC_XCE2
PIO15
PIO14
PC_XOE
PC_XVS1
PIO13
PIO12
PC_XIORD
PIO11
PIO10
PC_XIOWR
PIO9
PIO8
PC_XUBUF
PC_XWE
PIO7
PIO6
PC_XLBUF
PIO2
PIO5
PIO4
STAST1
DVDEJECT
STAST2
SFSCHK
MONION
GUIDEON
ANTON
CDSW
PBSNS
ILM
CPUWDT
XCCSTBY
TELSEL
TIMEOUT
ONSEIMUTE
EMPHOUT
DATAMUTE
UART6_XCTS
UART6_XRTS
UART6_XDSR
NOISE_TEL
VIDEOSW
HELP_RED
HELP_GREEN
KMODE
XRSTMS3
MICSNS
PIO31
SDSEL
TCHTOC
SCLK
TCHFRAME
HYOKA
IRQPWR
ATA_DIR
REM_IN
CD_BCLK
CD_LRCK
CD_DATA
USB_1P
USB_1M
USB_2P
USB_2M
USBP
USBM
GNDP
USB_PEN
USB_XPEN
USB_OVCR
USB_XOVCR
USBXPEN
USBXOVCR
RST3
GNDD
XCS_SRAM
SRAM_CSE
XMWR
XLUBEN
XLLBEN
XMRD
R/W
XCS7
XCS6
XCS5
XCS4
XCS2

3.5 CC UNIT (GRAPHIC)(GUIDE PAGE)

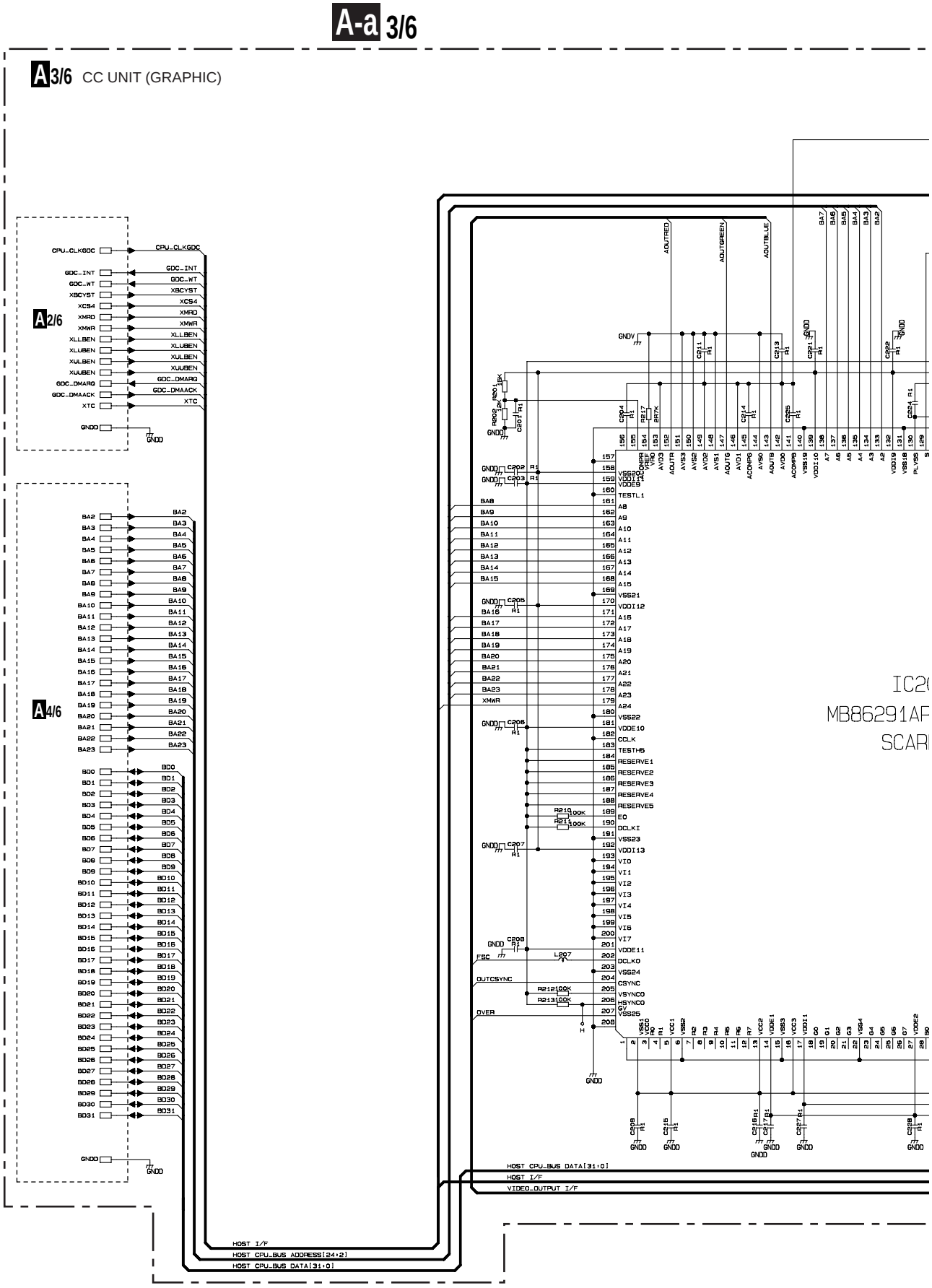

A3/6

A-b 3/6

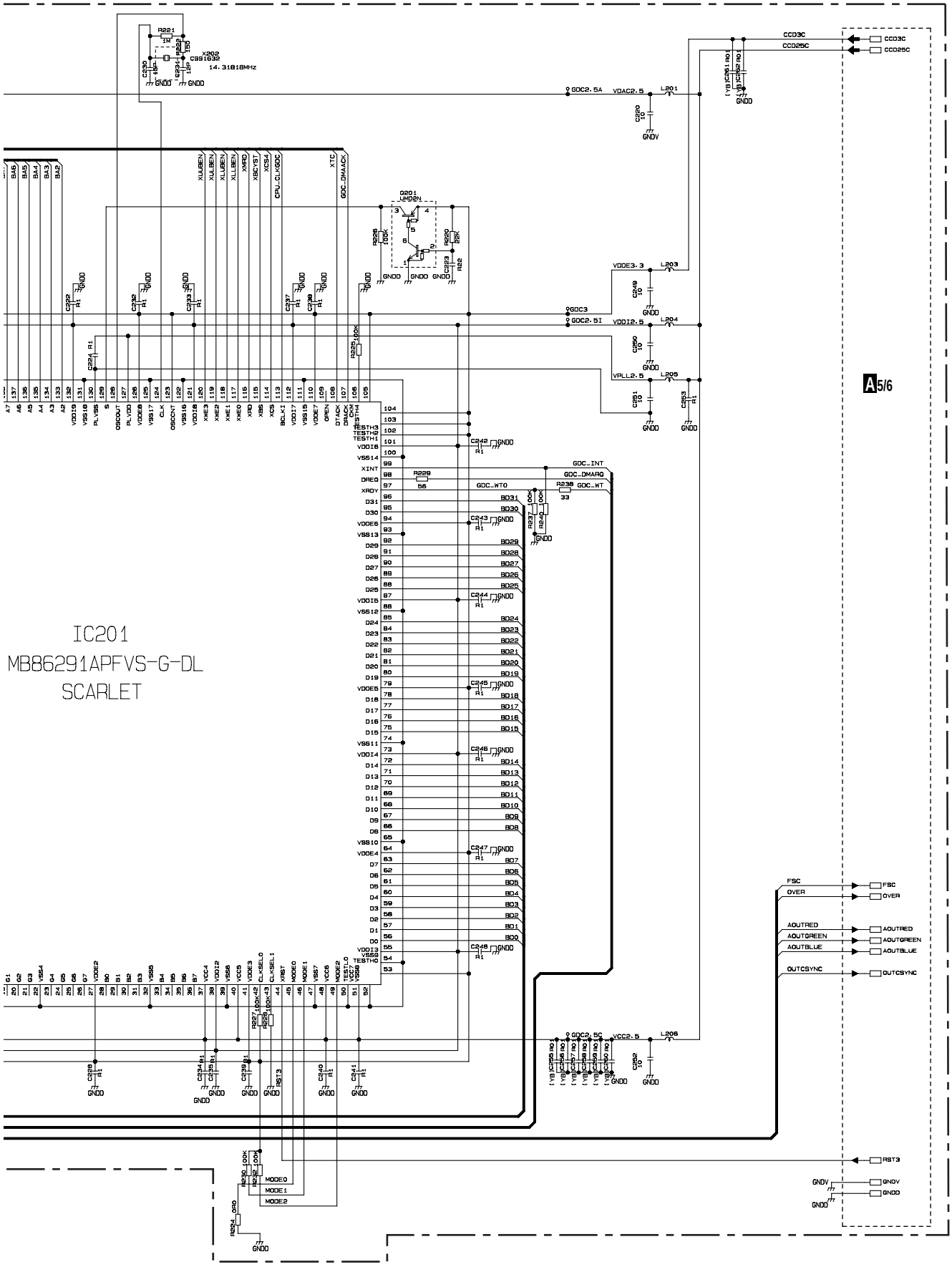
IC201
MB86291APFVS-G-DL
SCARLET
A5/6
CCD3C
CCD25C
FSC
OVER
AOUTRED
AOUTGREEN
AOUTBLUE
OUTCSYNC
RST3
GNDV
GNDD
GDC2.5A
VDAC2.5
VDDE3.3
VDDI2.5
VPLL2.5
GDC3
GDC2.5I
GDC2.5C
VCC2.5
GDC_INT
GDC_DMARQ
GDC_WT
GDC_WT0
MODE0
MODE1
MODE2
X202
CSS1632
14.31818MHz
Q201
UMD2N

A 3/6

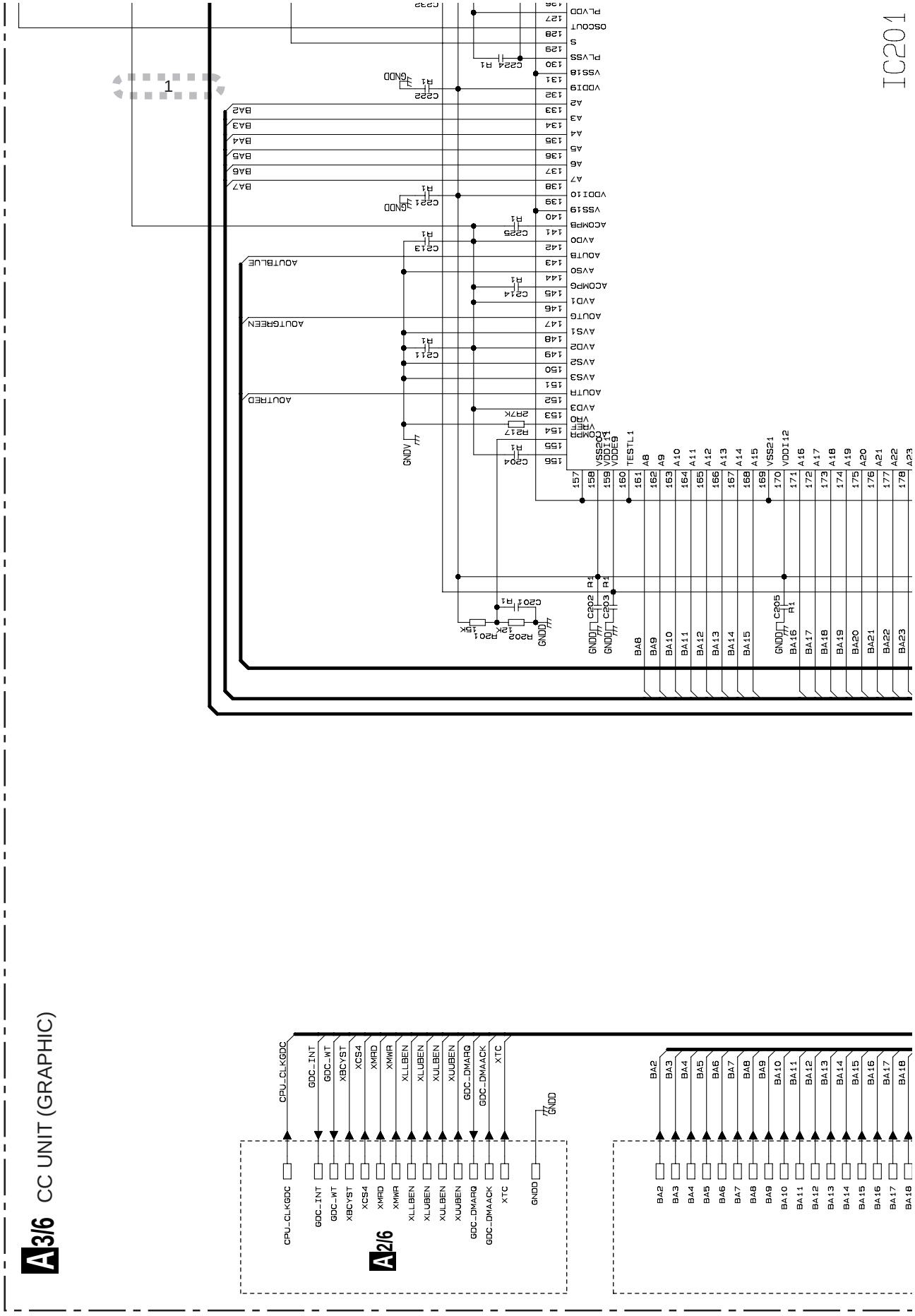
A-b 3/6
IC201
A-a 3/6
A3/6 CC UNIT (GRAPHIC)
A2/6
CPU_CLKGDC
GDC_INT
GDC_WT
XBCYST
XCS4
XMRD
XMWR
XLLBEN
XLUBEN
XULBEN
XUUBEN
GDC_DMARQ
GDC_DMAACK
XTC
GNDD
BA2
BA3
BA4
BA5
BA6
BA7
BA8
BA9
BA10
BA11
BA12
BA13
BA14
BA15
BA16
BA17
BA18

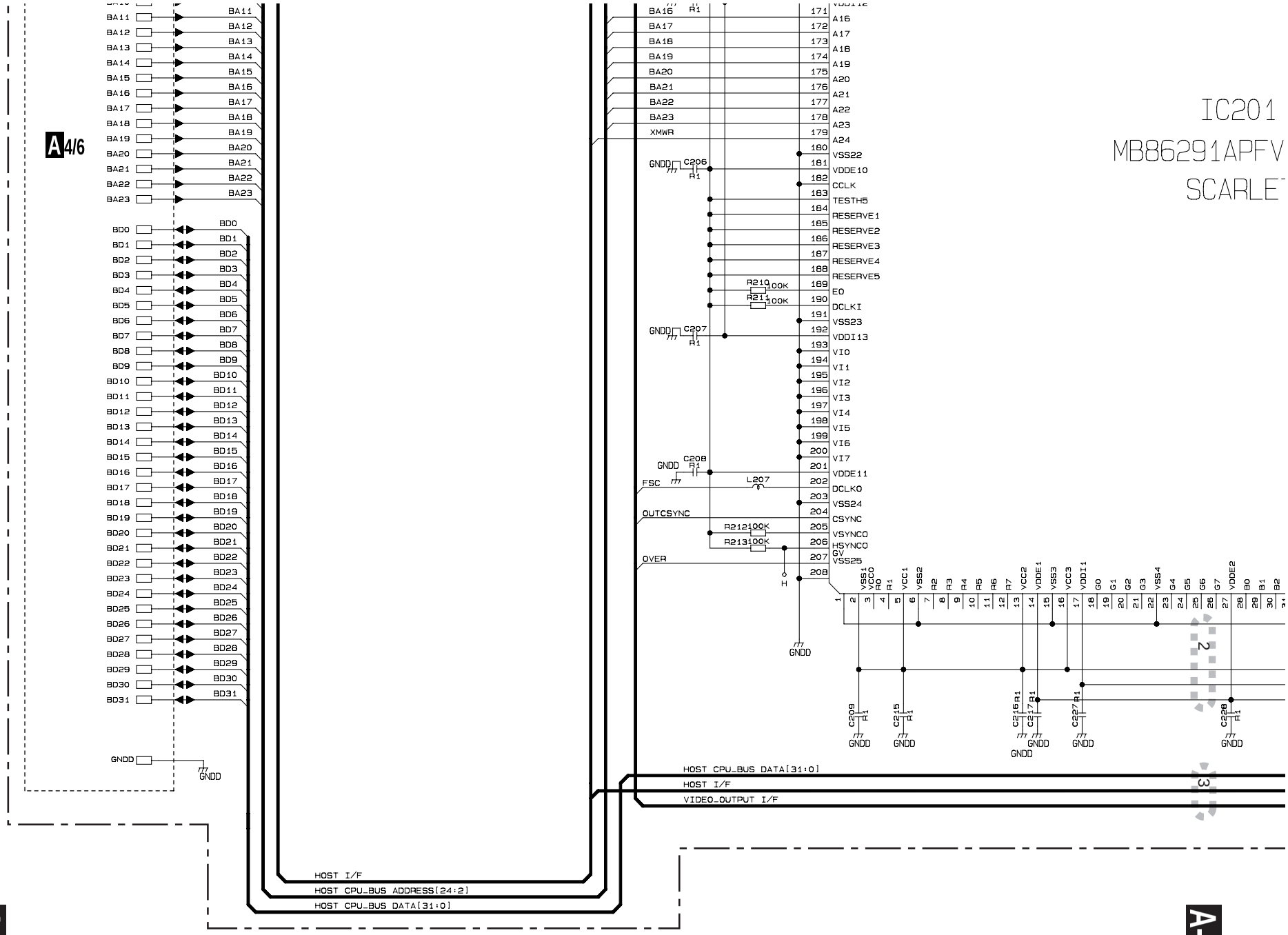
IC201
MB86291APFV
SCARLET
A 4/6
BA11
BA12
BA13
BA14
BA15
BA16
BA17
BA18
BA19
BA20
BA21
BA22
BA23
BD0
BD1
BD2
BD3
BD4
BD5
BD6
BD7
BD8
BD9
BD10
BD11
BD12
BD13
BD14
BD15
BD16
BD17
BD18
BD19
BD20
BD21
BD22
BD23
BD24
BD25
BD26
BD27
BD28
BD29
BD30
BD31
GNDD
XMWR
VSS22
VDDE10
CCLK
TESTH5
RESERVE1
RESERVE2
RESERVE3
RESERVE4
RESERVE5
EO
DCLKI
VSS23
VDDI13
VI0
VI1
VI2
VI3
VI4
VI5
VI6
VI7
VDDE11
DCLKO
VSS24
CSYNC
VSYNCO
HSYNCO
GV
VSS25
FSC
OUTCSYNC
OVER
R210 100K
R211 100K
R212 100K
R213 100K
C206 R1
C207 R1
C208 R1
L207
HOST CPU_BUS DATA[31:0]
HOST I/F
VIDEO_OUTPUT I/F
HOST I/F
HOST CPU_BUS ADDRESS[24:2]
HOST CPU_BUS DATA[31:0]
A-a 3/6
A-b 3/6
AVIC-D1/UC
A-a A-b

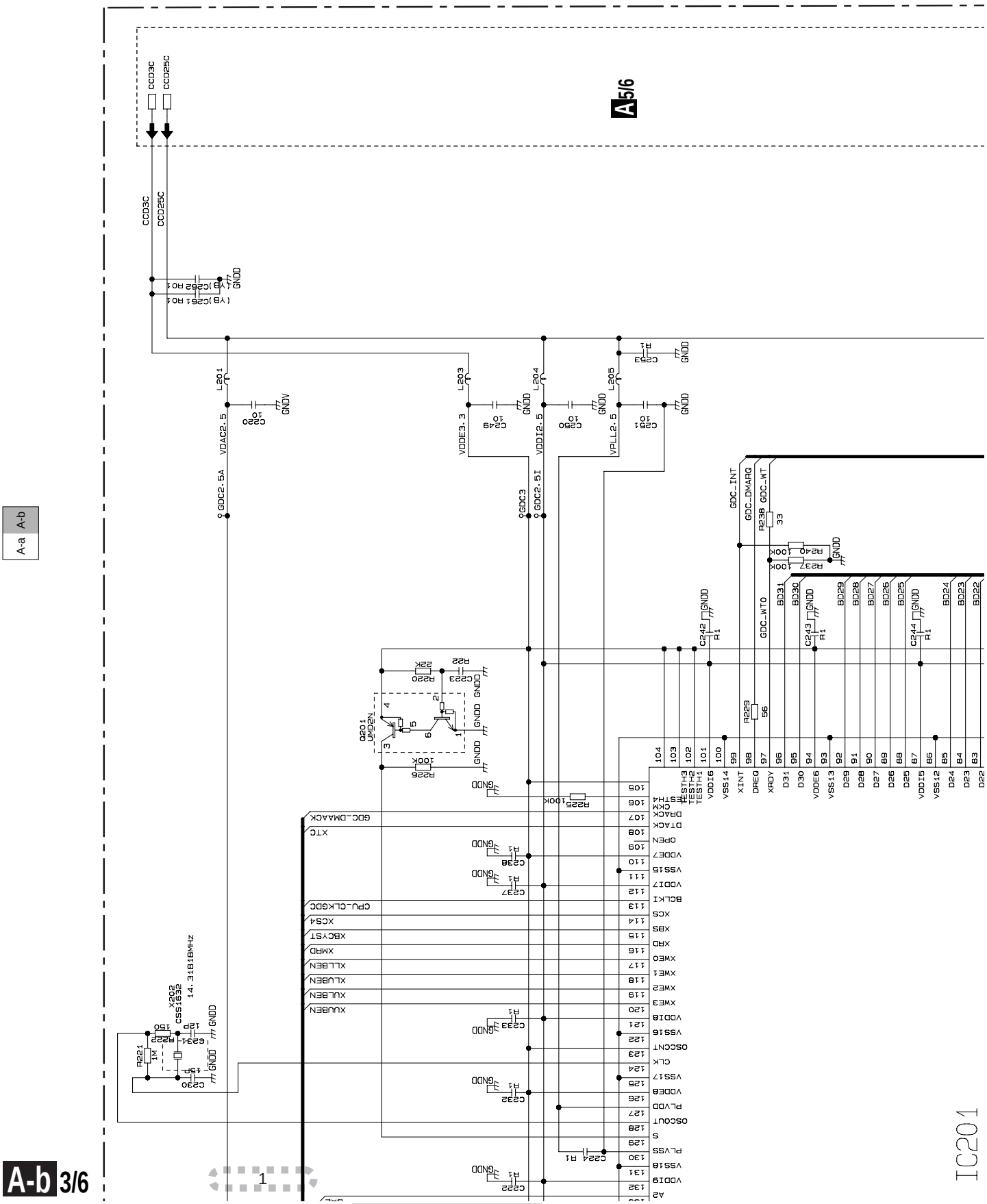
A5/6
CCD3C
CCD25C
L201
L203
L204
L205
VDAC2.5
VDDE3.3
VDDI2.5
VPLL2.5
GDC2.5A
GDC3
GDC2.5I
GDC_INT
GDC_DMARQ
GDC_WT
GDC_WTO
R238
R229
Q201
UMD2N
X202
CSS1632
14.31818MHz
GDC_DMAACK
XTC
CPU_CLKGDC
XCS4
XBCYST
XMRD
XLLBEN
XLUBEN
XUUBEN
IC201
A-a
A-b
A-b 3/6

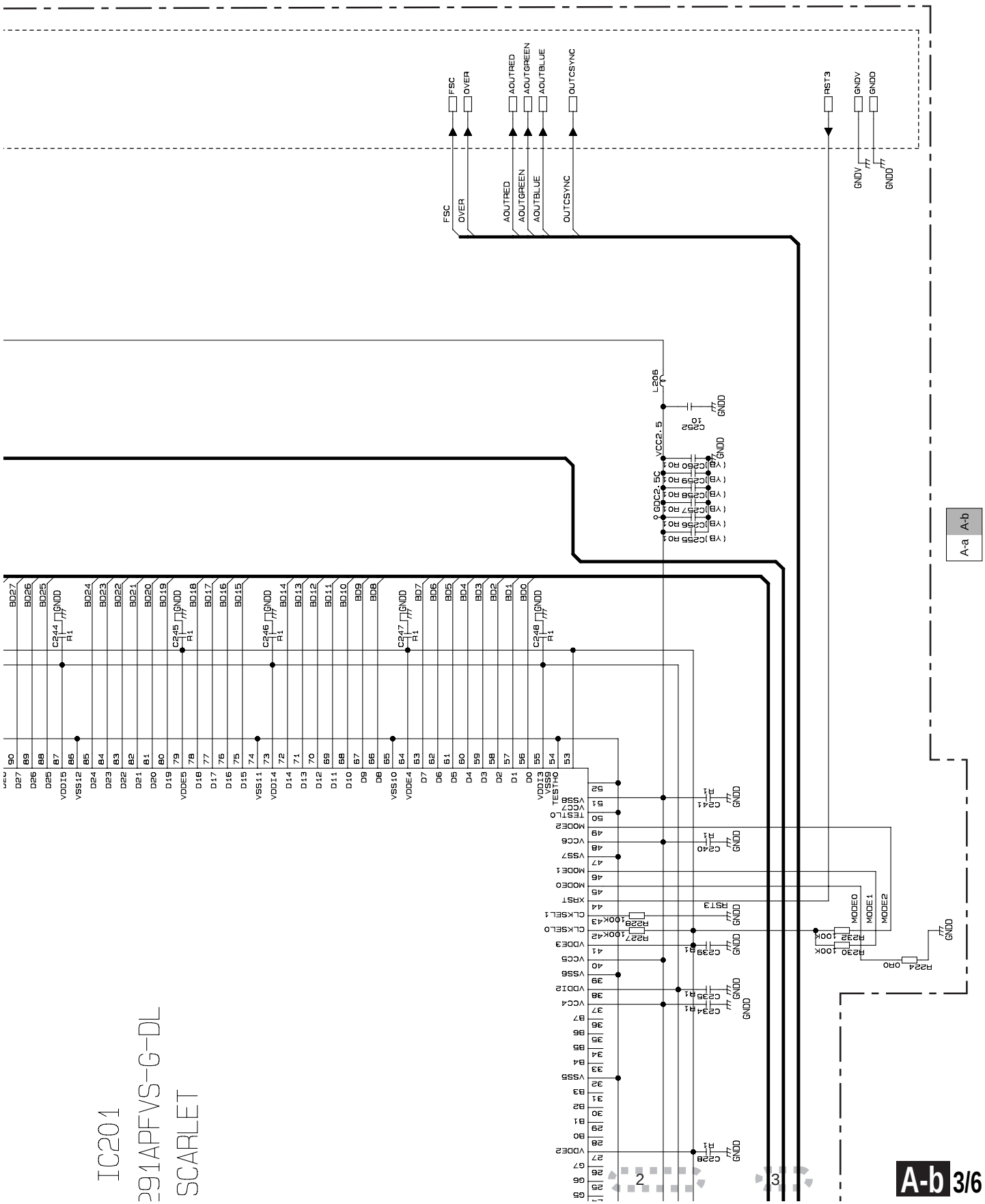
IC201
291APFVS-G-DL
SCARLET
FSC
OVER
AOUTRED
AOUTGREEN
AOUTBLUE
OUTCSYNC
RST3
GNDV
GNDD
L206
VCC2.5
GDC2.5C
A-a
A-b
A-b 3/6

3.6 CC UNIT (ROM, SRAM, BUS-BUFFER)

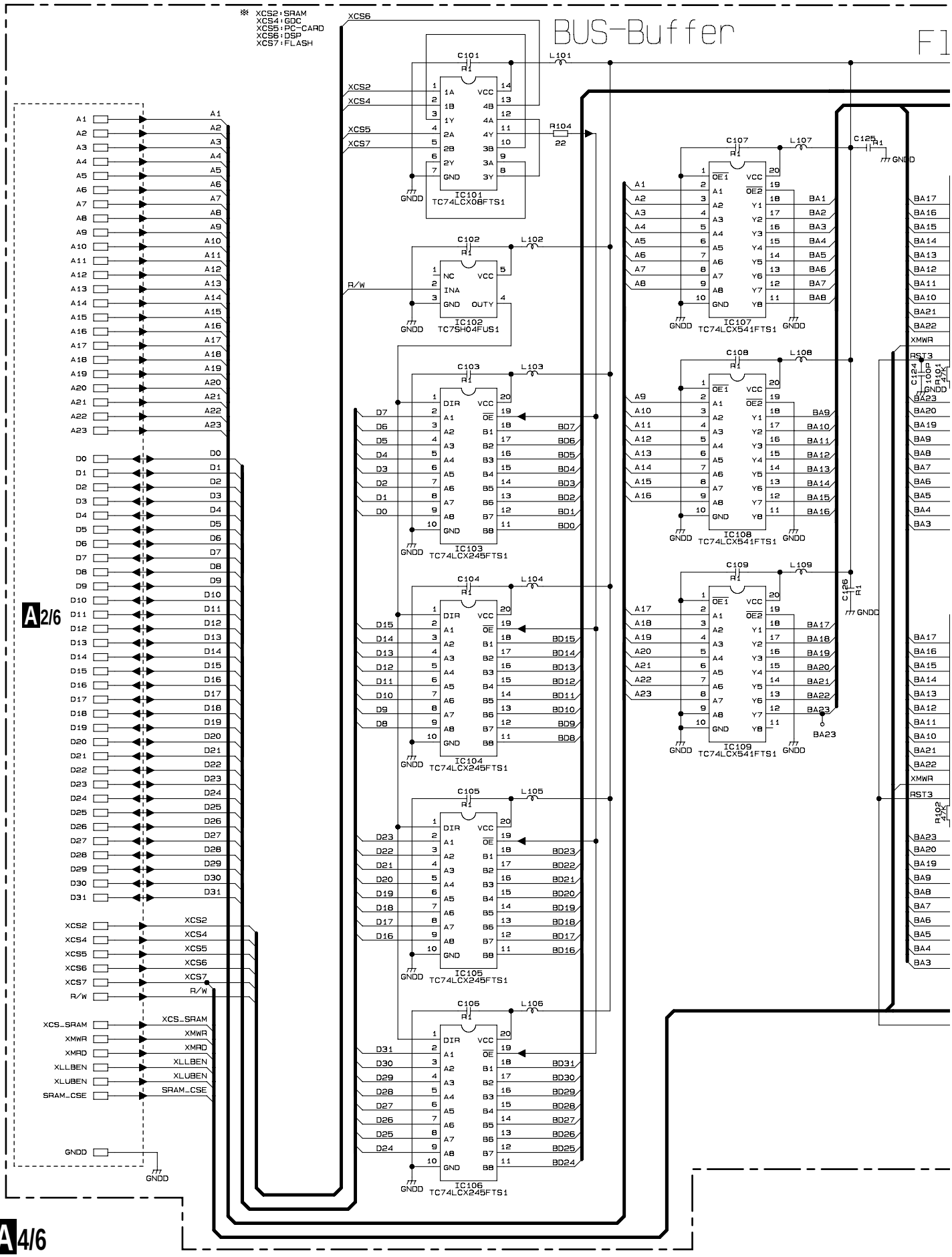

A4/6 CC UNIT (ROM, SRAM, BUS-BUFFER)

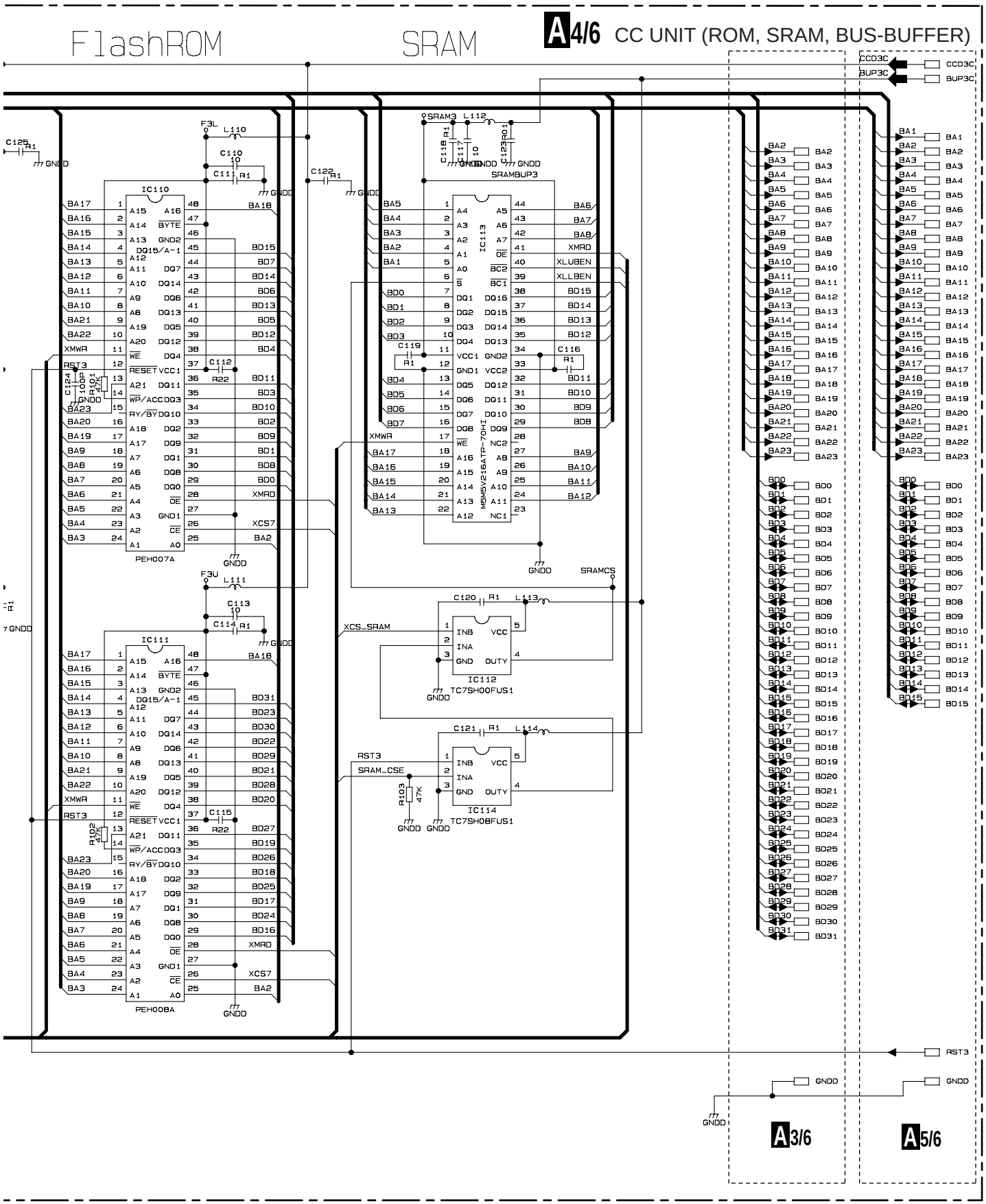

3.7 CC UNIT (MAIN, CC CORE I/F)

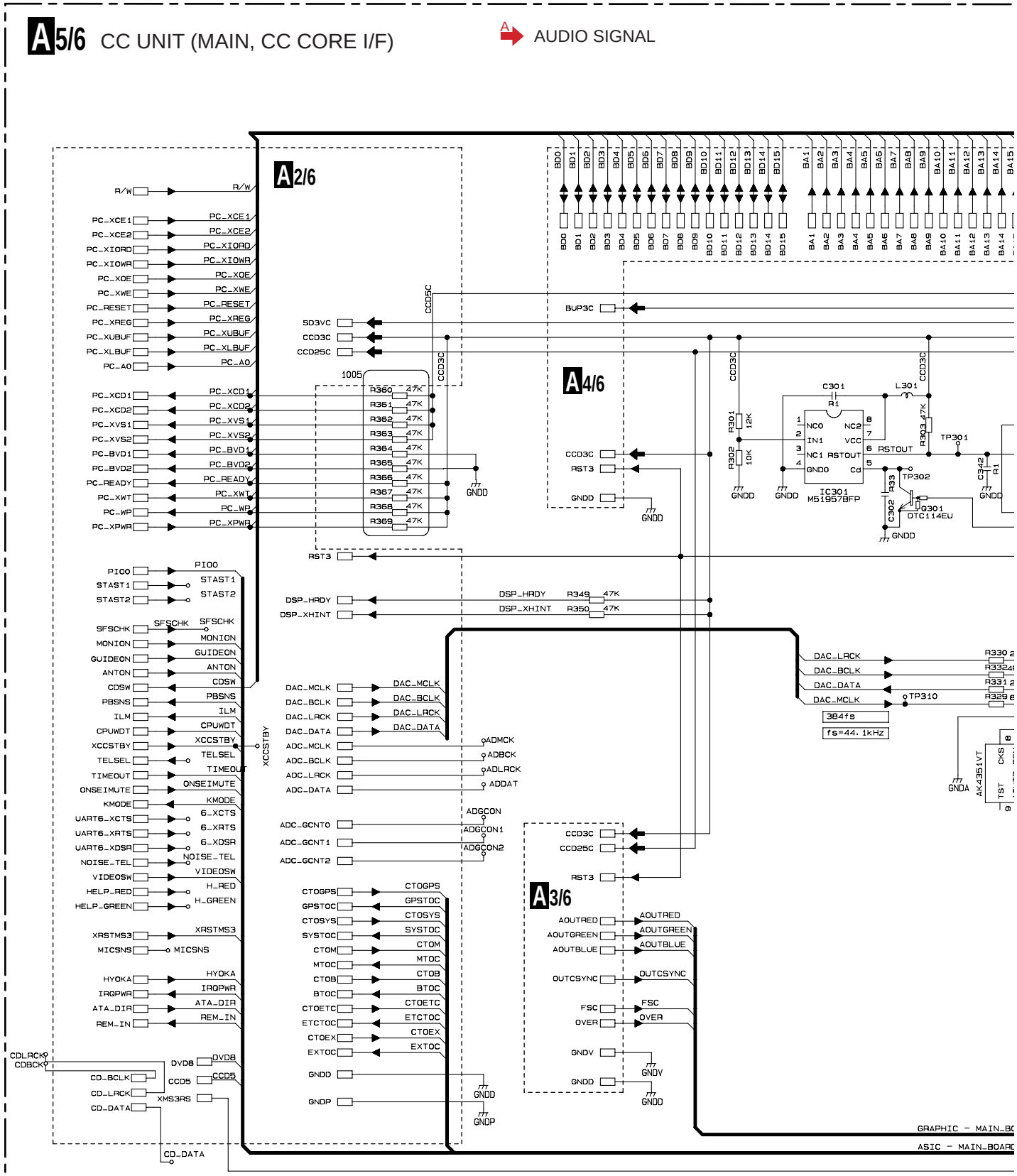

A5/6

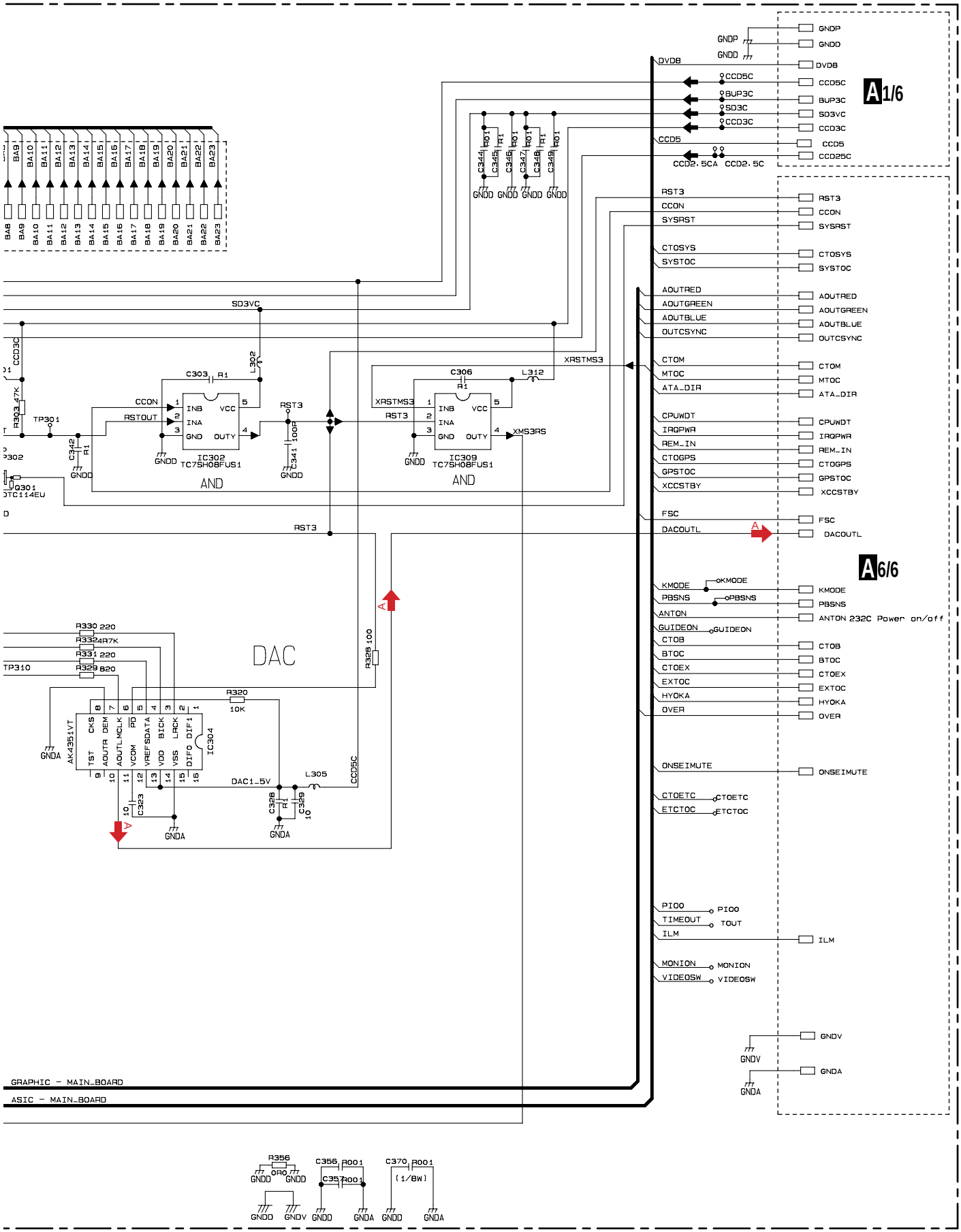

A1/6
A6/6
A5/6
GNDP
GNDD
DVD8
CCD5C
BUP3C
SD3C
SD3VC
CCD3C
CCD5
CCD25C
CCD2.5CA
CCD2.5C
RST3
CCON
SYSRST
CTOSYS
SYSTOC
AOUTRED
AOUTGREEN
AOUTBLUE
OUTCSYNC
CTOM
MTOC
ATA_DIR
CPUWDT
IRQPWR
REM_IN
CTOGPS
GPSTOC
XCCSTBY
FSC
DACOUTL
KMODE
PBSNS
ANTON
ANTON 232C Power on/off
GUIDEON
CTOB
BTOC
CTOEX
EXTOC
HYOKA
OVER
ONSEIMUTE
CTOETC
ETCTOC
PIOO
TIMEOUT
TOUT
ILM
MONION
VIDEOSW
GNDV
GNDA
GRAPHIC - MAIN_BOARD
ASIC - MAIN_BOARD
IC302
TC7SH08FUS1
IC309
TC7SH08FUS1
AND
DAC
AK4351VT
IC304
DAC1_5V
XRSTMS3
XMS3RS
SD3VC
TP301
TP310
R330 220
R332 4R7K
R331 220
R329 820
R320 10K
R328 100
L302
L312
L305
C303 R1
C306 R1
C341 100P
C342 R1
C323 10
C328 R1
C329 10
R356 0R0
C356 R001
C357 R001
C370 R001 (1/8W)

3.8 CC UNIT (GPS, SENSOR, VIDEO, I/F)

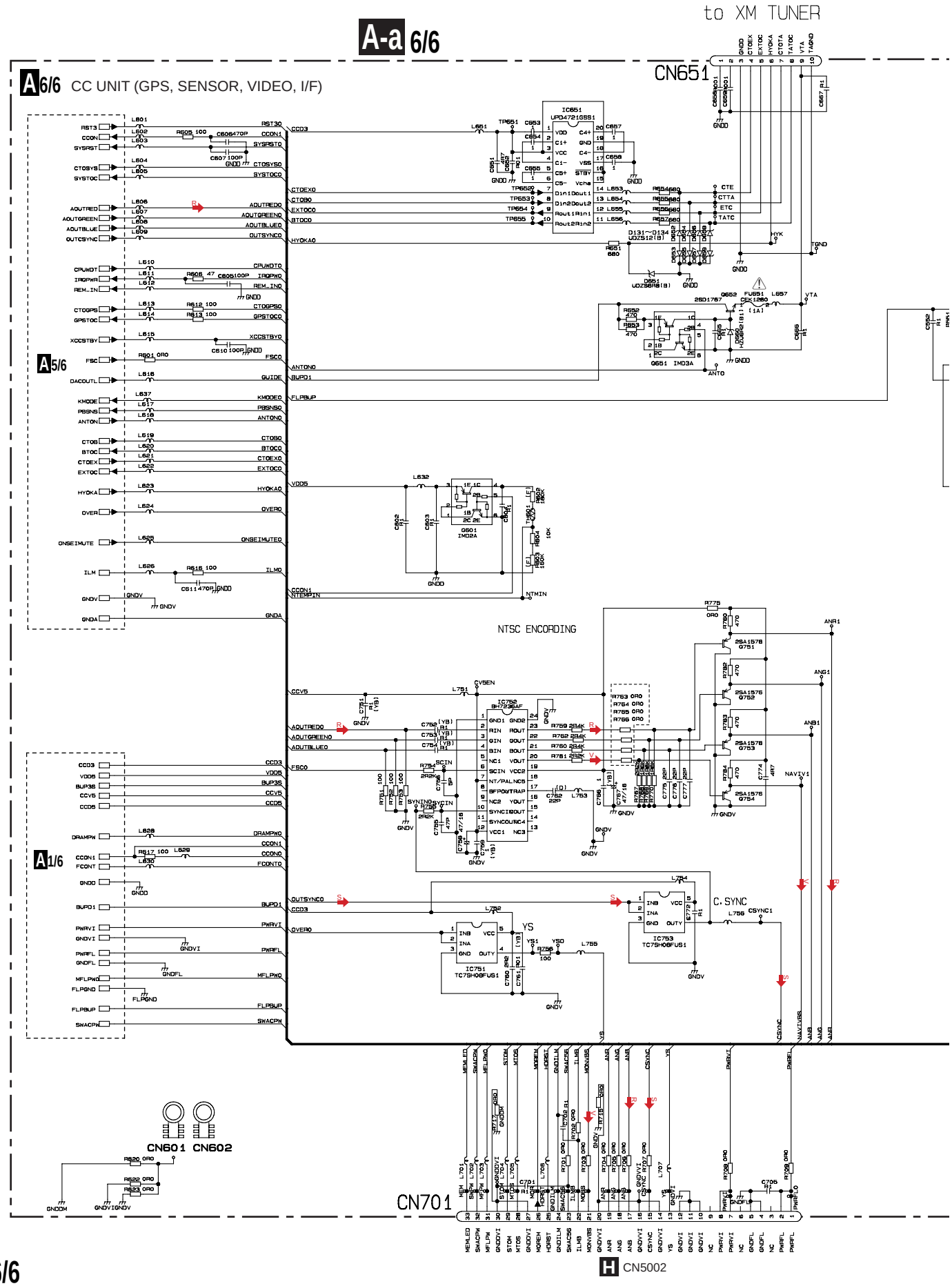

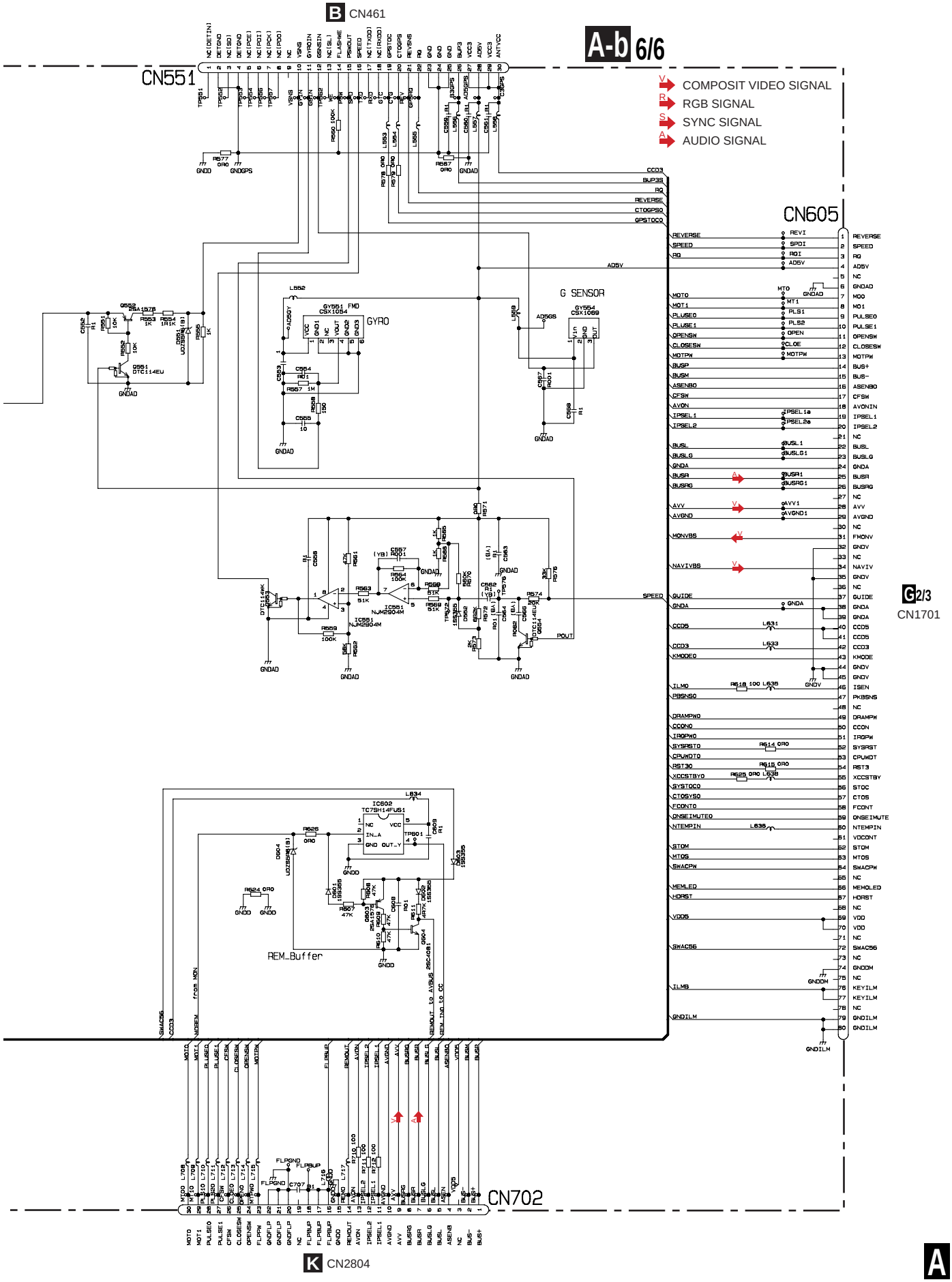
A-b 6/6
B CN461
CN551
COMPOSIT VIDEO SIGNAL
RGB SIGNAL
SYNC SIGNAL
AUDIO SIGNAL
CN605
G SENSOR
GYRO
G2/3
CN1701
REM_Buffer
CN702
K CN2804
A 6/6

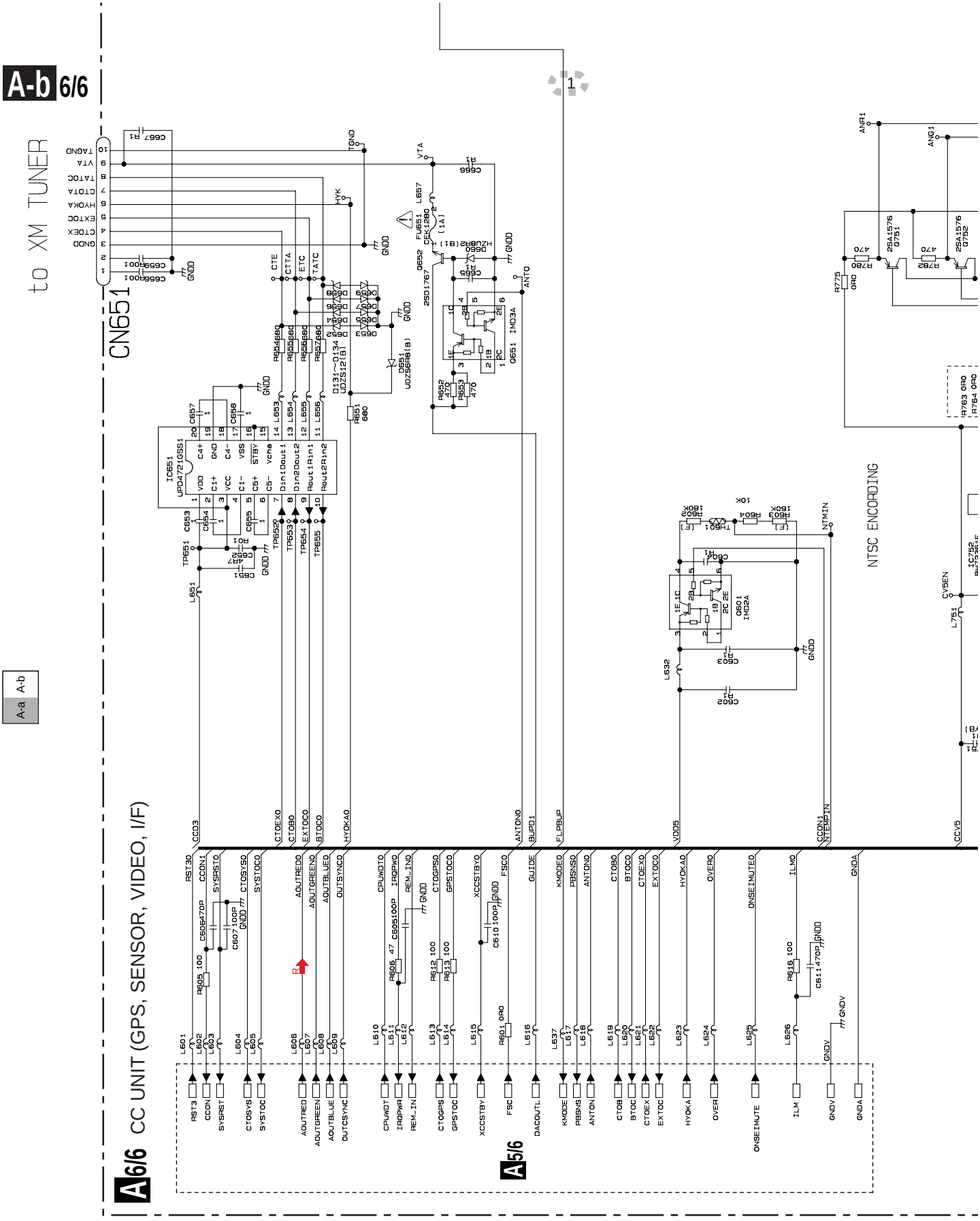
to XM TUNER
CN651
IC651
UPD72105S1
NTSC ENCODING
A6/6 CC UNIT (GPS, SENSOR, VIDEO, I/F)
A5/6

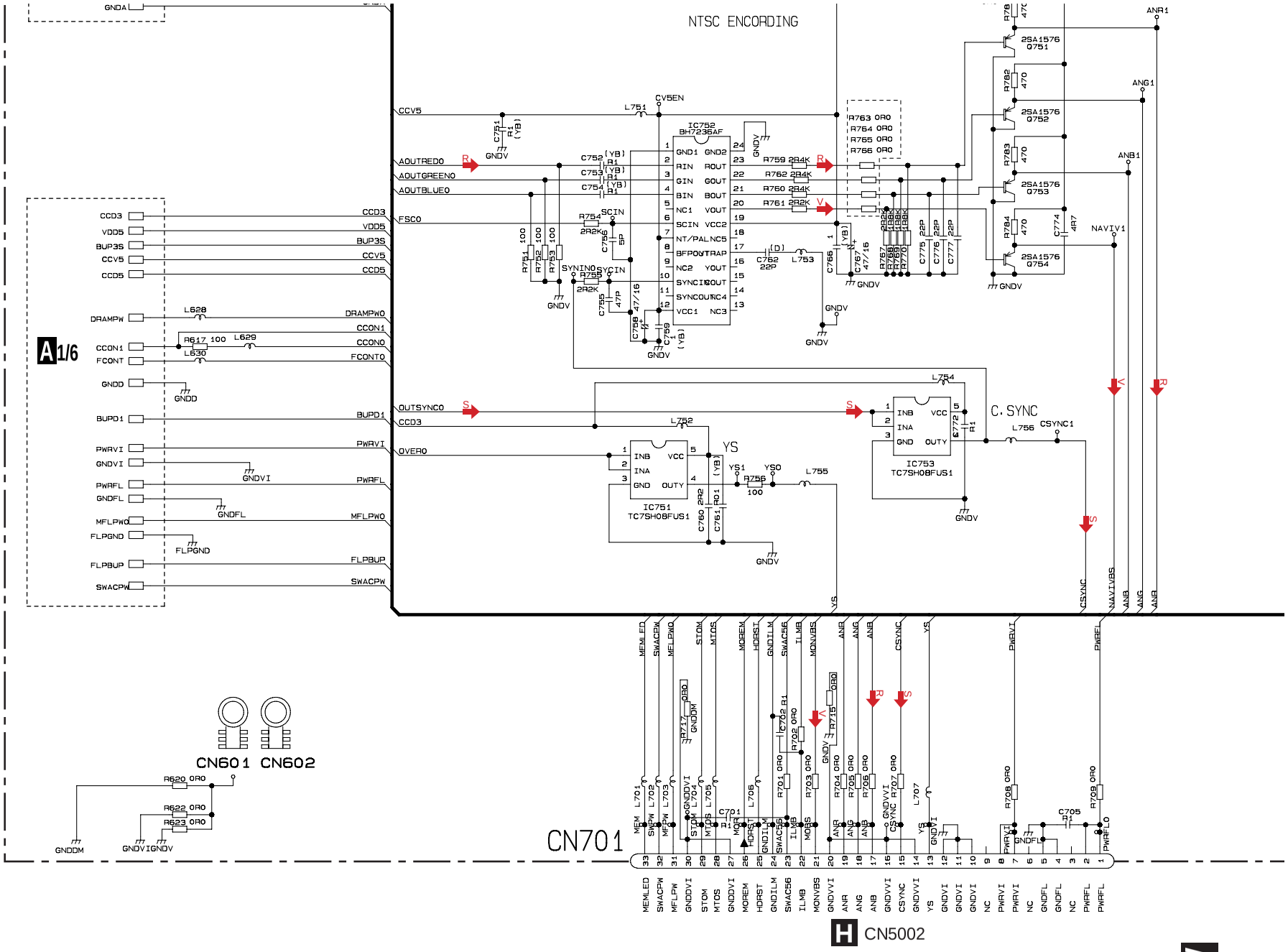

A-a 6/6

A-b 6/6

A-a A-b

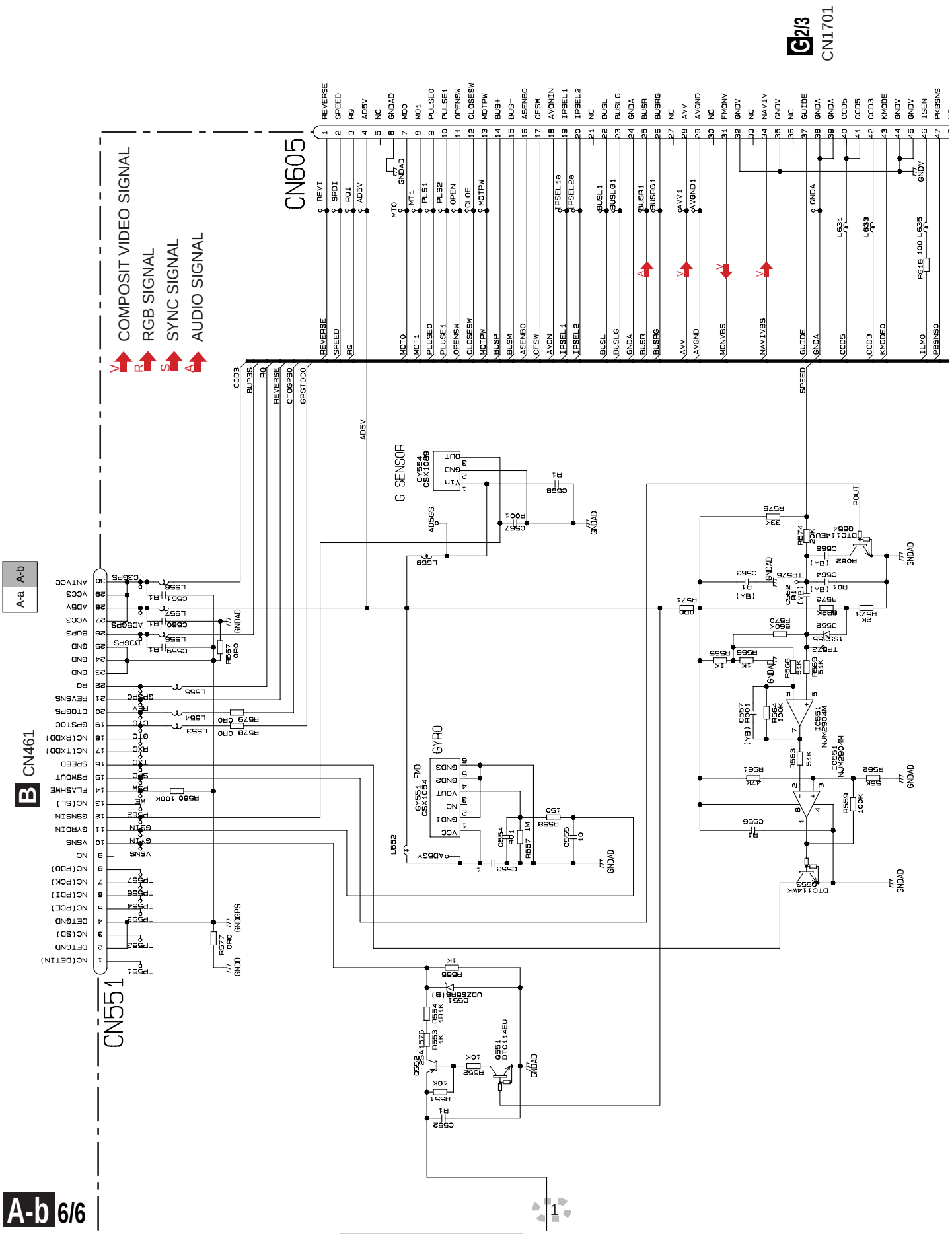

CN1701
G2/3
CN605
COMPOSIT VIDEO SIGNAL
RGB SIGNAL
SYNC SIGNAL
AUDIO SIGNAL
CN461
CN551
G SENSOR
GYRO
A-a
A-b
A-b 6/6

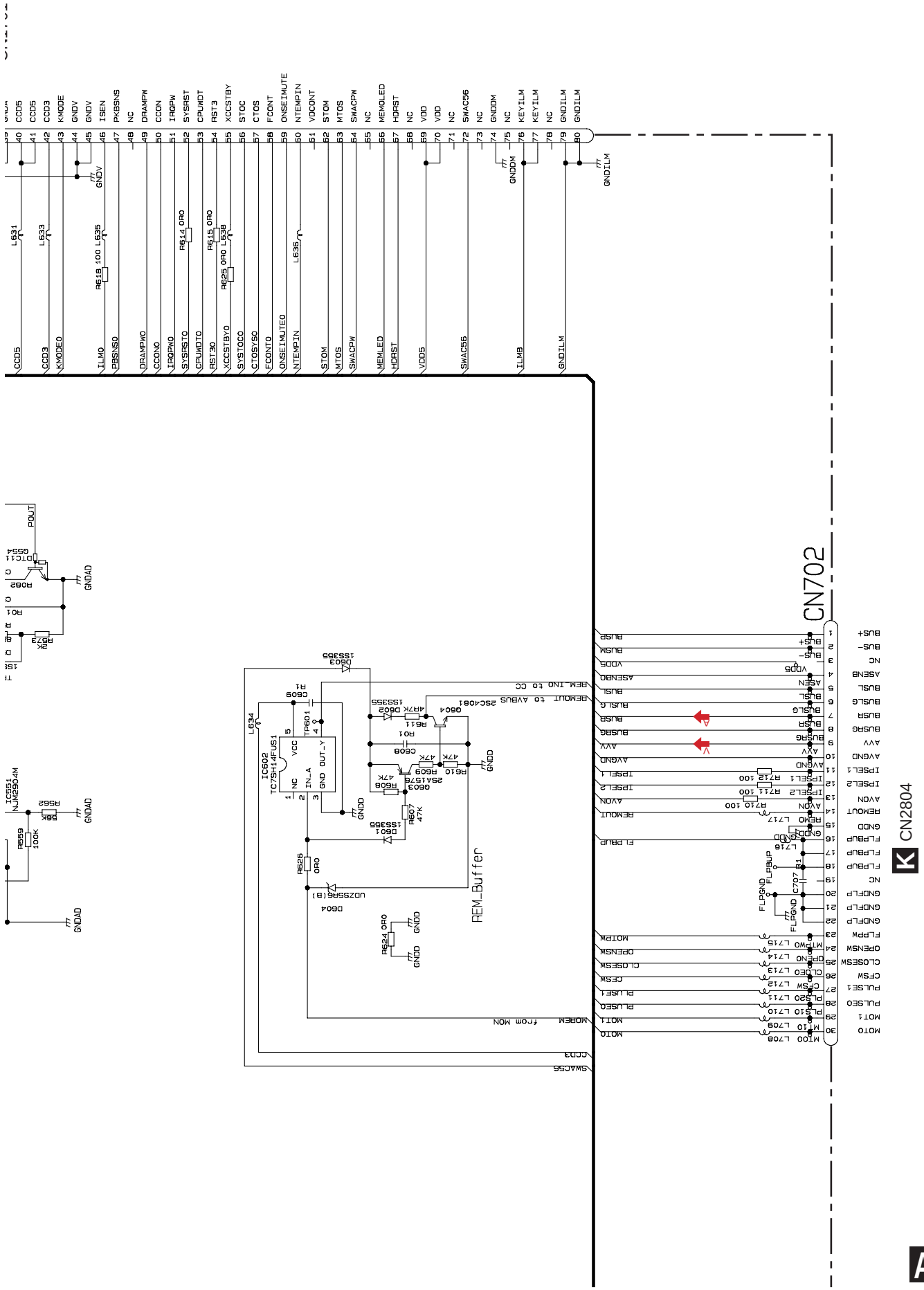
CN702
CN2804
REM_Buffer
A-a
A-b

3.9 GPS UNIT (GUIDE PAGE)

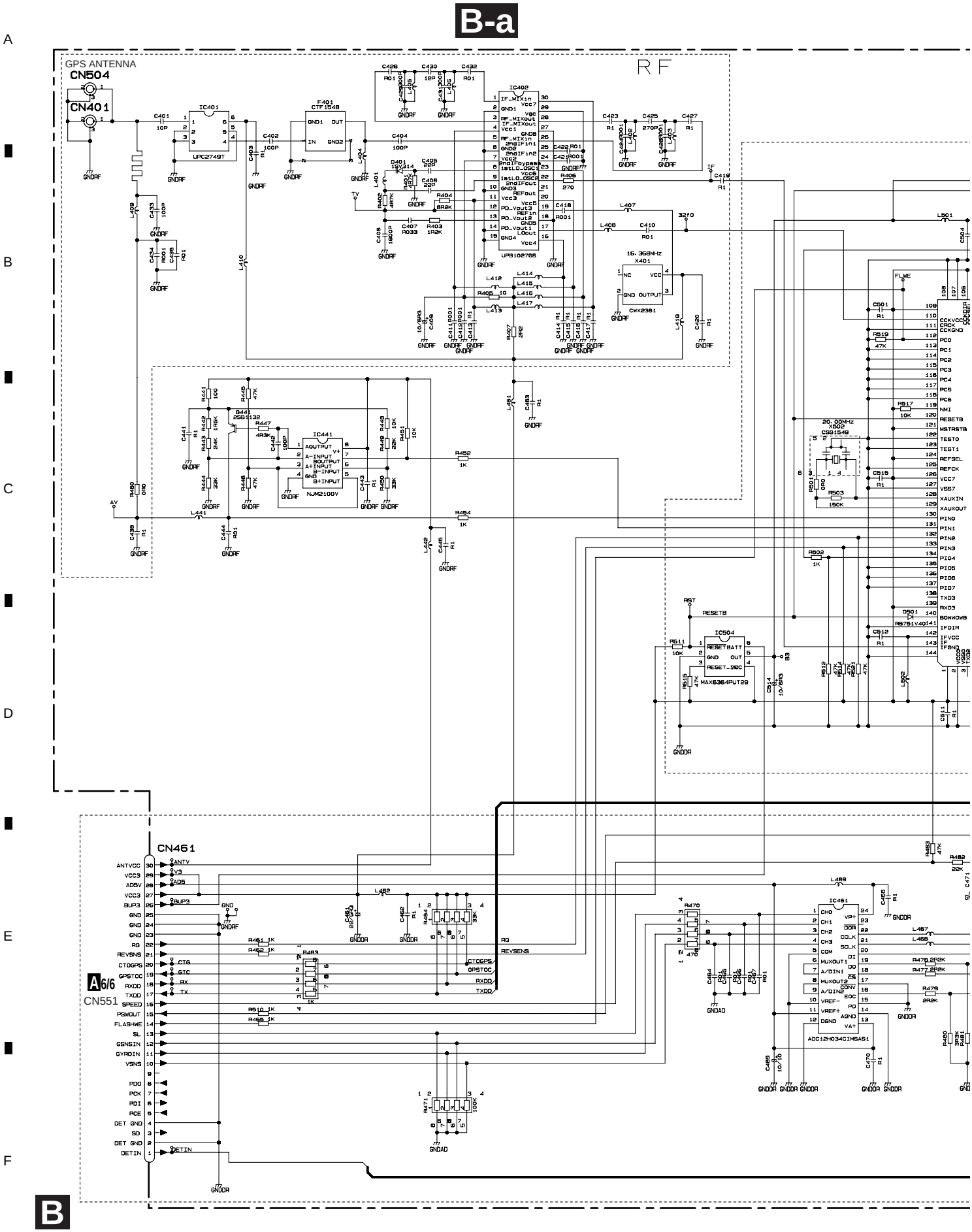

B-b

B GPS UNIT

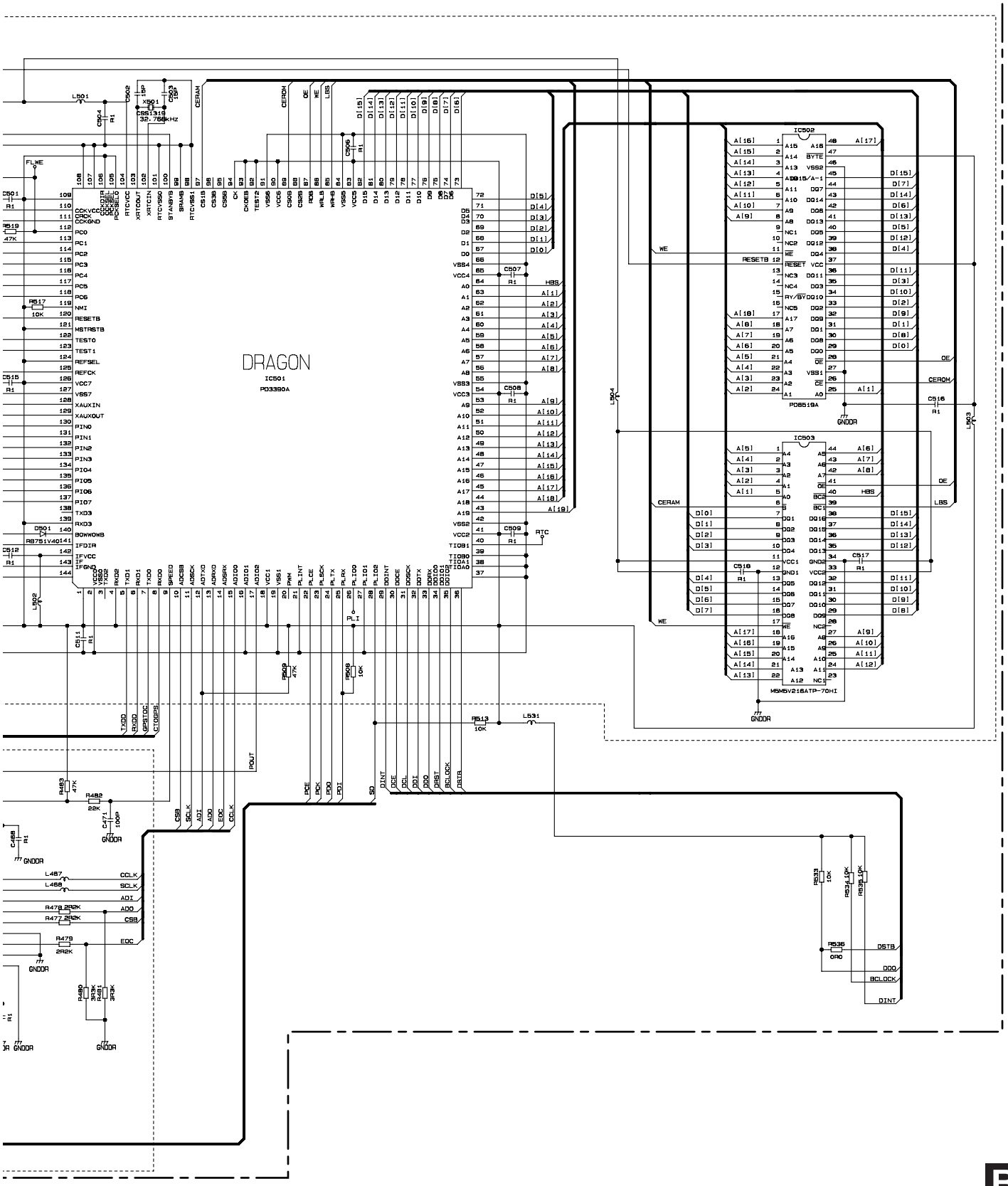

B

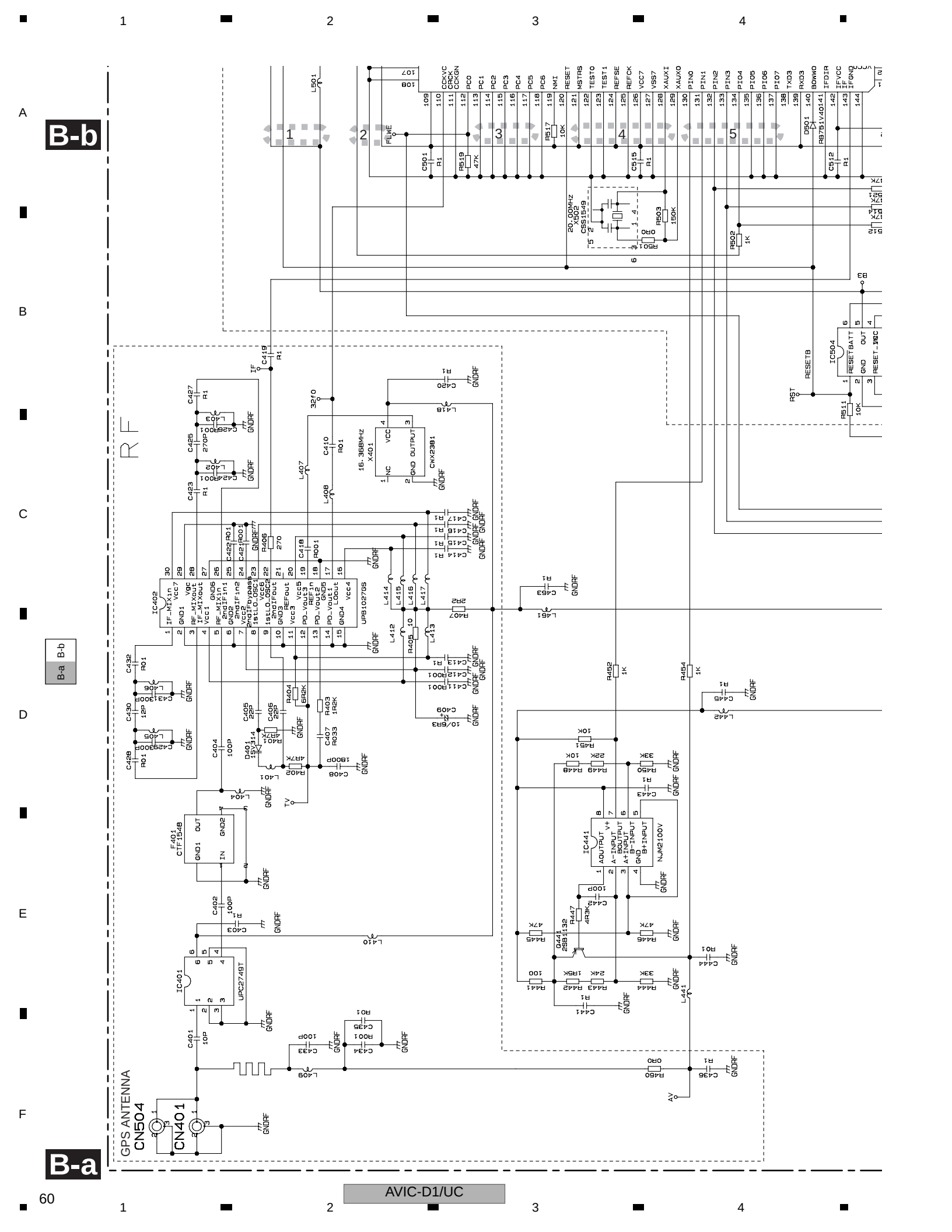
B-b
B-a
RF
GPS ANTENNA
CN504
CN401
IC402
IC401
IC441
IC504
X401
X502
F401
Q441
Q401
D501
L501
L407
L408
L410
L441
L461
L442
L445
L404
L401
L409
L403
L402
L406
L405
L418
L414
L415
L416
L417
L412
L413
L411
L404
C419
C420
C427
C425
C423
C432
C430
C428
C410
C409
C408
C407
C405
C406
C404
C402
C401
C501
C515
C512
C453
C445
C443
C442
C441
C444
C436
C435
C434
C433
C418
C417
C416
C415
C414
C413
C412
R519
R517
R503
R502
R501
R511
R452
R454
R451
R450
R449
R448
R447
R446
R445
R444
R443
R442
R441
R407
R406
R405
R404
R403
R402
R401
R460
RESETB
RST
32f0
IF
TV
AV
GNDRF
FLWE
20.00MHz
CSS1549
16.368MHz
CWX2381
UPB1027GS
UPC2749T
CTF1548
NJM2100V
RB751V40
D501
RESETBATT
RESET_MC
CCKVC
CRCK
CCKGN
PC0
PC1
PC2
PC3
PC4
PC5
PC6
NMI
RESET
MSTRS
TEST0
TEST1
REFSE
REFCK
VCC7
VSS7
XAUXI
XAUXO
PIN0
PIN1
PIN2
PIN3
PIO4
PIO5
PIO6
PIO7
TXD3
RXD3
BOWWO
IFDIR
IFVCC
IFGND
IF-MIXin
Vcc7
GND1
Vgc
RF-MIXout
IF-MIXout
Vcc1
GND6
RF-MIXin
2ndIFin1
GND2
2ndIFin2
Vcc2
2ndIFbypass
1stLO_OSC1
1stLO_OSC2
2ndIFout
GND3
REFout
Vcc3
PD_Vout3
REFin
PD_Vout2
GND5
PD_Vout1
LOout
GND4
Vcc4
Vcc5
OUTPUT
VCC
GND
NC
AOUTPUT
A-INPUT
BOUTPUT
A+INPUT
B-INPUT
GND
B+INPUT
V+
OUT
GND2
GND1
IN
RESETBATT
GND
OUT
RESET_MC

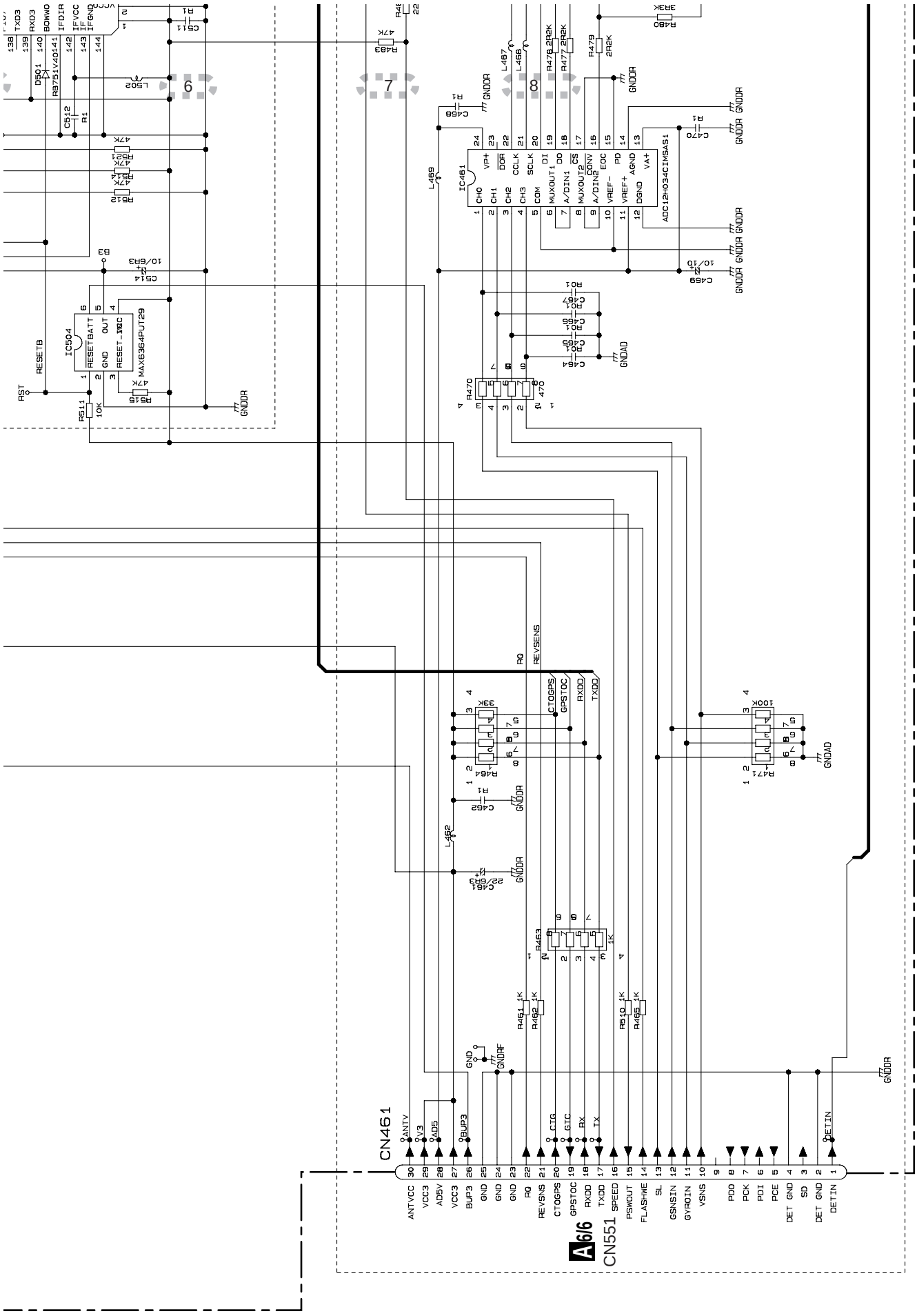
B-b
B-a
CN461
CN551
A6/6
IC504
MAX6364PUT29
IC461
ADC12H034CIMSAS1
RESETB
RST
GNDDR
GNDAD
REVSENS
RQ
CTOGPS
GPSTOC
RXDD
TXDD
ANTVCC
VCC3
AD5V
VCC3
BUP3
GND
GND
GND
RQ
REVSNS
CTOGPS
GPSTOC
RXDD
TXDD
SPEED
PSWOUT
FLASHWE
SL
GSNSIN
GYROIN
VSNS
PDO
PCK
PDI
PCE
DET GND
SD
DET GND
DETIN

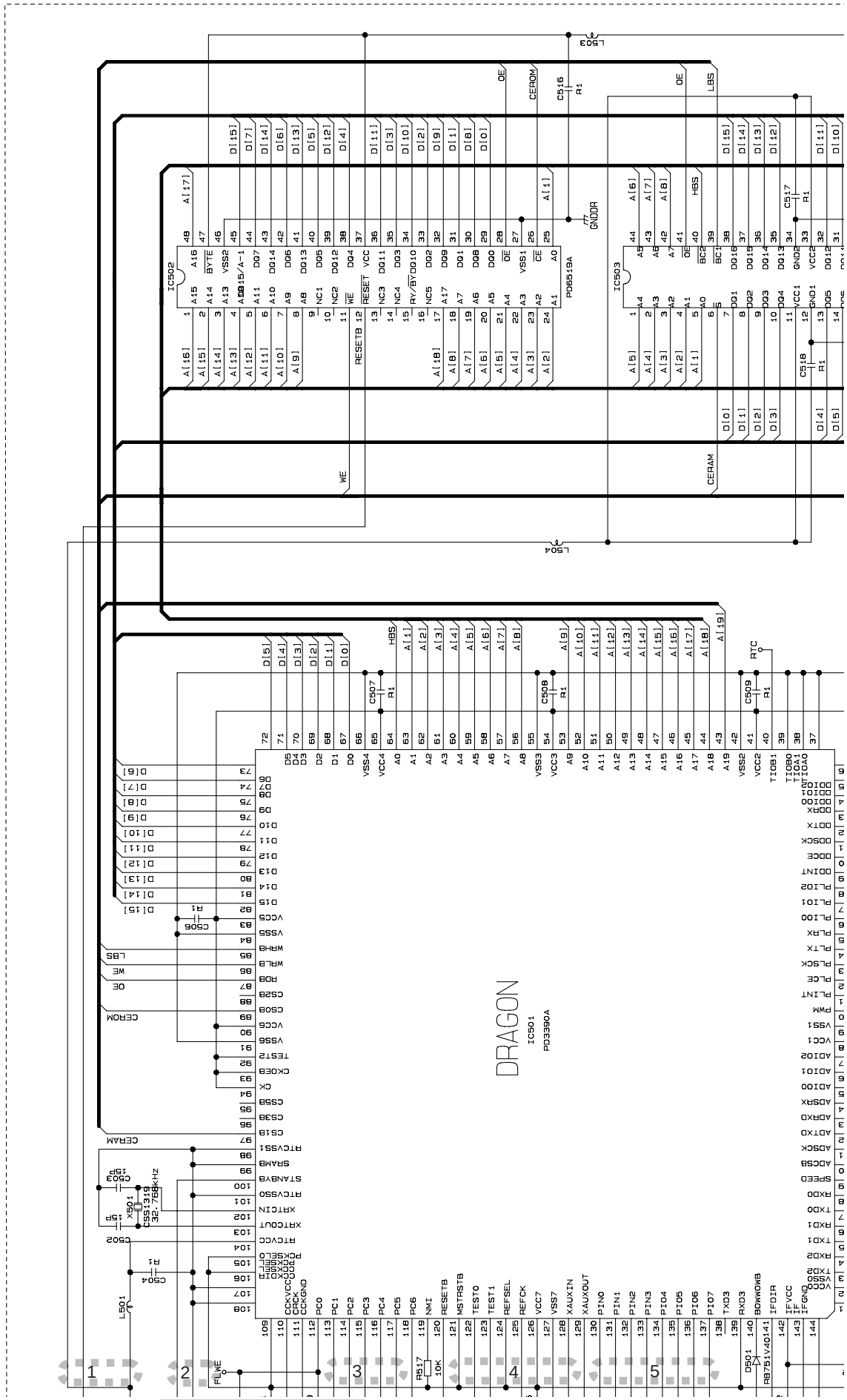
DRAGON
IC501
PD3390A
IC502
PD6519A
IC503
L503
L504
L501
C516 R1
C517 R1
C518 R1
C507 R1
C508 R1
C509 R1
C506 R1
C503 15P
C502 15P
C504 R1
X501 CSS1319 32.768kHz
D501 RB751V40141
R517 10K
FLWE
CEROM
CERAM
LBS
HBS
WE
OE
RTC
GNDDR
RESETB
CCKVCC
CRCK
CCKGND
PC0
PC1
PC2
PC3
PC4
PC5
PC6
NMI
RESETB
MSTRSTB
TESTO
TEST1
REFSEL
REFCK
VCC7
VSS7
XAUXIN
XAUXOUT
PIN0
PIN1
PIN2
PIN3
PIN4
PIN5
PIN6
PIN7
TXD3
RXD3
BOWWOWB
IFDIR
IFVCC
IFGND
TIOB0
TIOA1
TIOA0
VSS1
VCC1
ADIO2
ADIO1
ADIO0
ADSRX
ADRXD
ADTXD
ADSCK
ADCSB
SPEED
RXD0
TXD0
RXD1
TXD1
RXD2
TXD2
VSS0
VCC0
VSS4
VCC4
VSS3
VCC3
VSS2
VCC2
TIOB1
TIOB0
TIOA1
TIOA0
DDIO2
DDIO1
DDIO0
DDRX
DDTX
DDSCK
DDCE
DDINT
PLIO2
PLIO1
PLIO0
PLRX
PLTX
PLSCK
PLCE
PLINT
PWM
VSS1
VCC1
ADIO2
ADIO1
ADIO0
ADSRX
ADRXD
ADTXD
ADSCK
ADCSB
SPEED
RXD0
TXD0
RXD1
TXD1
RXD2
TXD2
VSS0
VCC0
VSS4
VCC4
VSS3
VCC3
VSS2
VCC2
TIOB1
TIOB0
TIOA1
TIOA0
DD5
DD4
DD3
DD2
DD1
DD0
VSS4
VCC4
VSS3
VCC3
VSS2
VCC2
TIOB1
TIOB0
TIOA1
TIOA0
DD6
DD7
DD8
DD9
DD10
DD11
DD12
DD13
DD14
DD15
VCC5
VSS5
WRHB
WRLB
RDB
CS2B
CS0B
VCC6
VSS6
TEST2
CKOEB
CK
CS5B
CS3B
CS1B
RTCVSS1
SRAMB
STANBYB
RTCVSS0
XRTCIN
XRTCOUT
RTCVCC
PCKSELO
PCKSEL
CCKSEL
CCKDIR
CCKVCC
CRCK
CCKGND
1
2
3
4
5

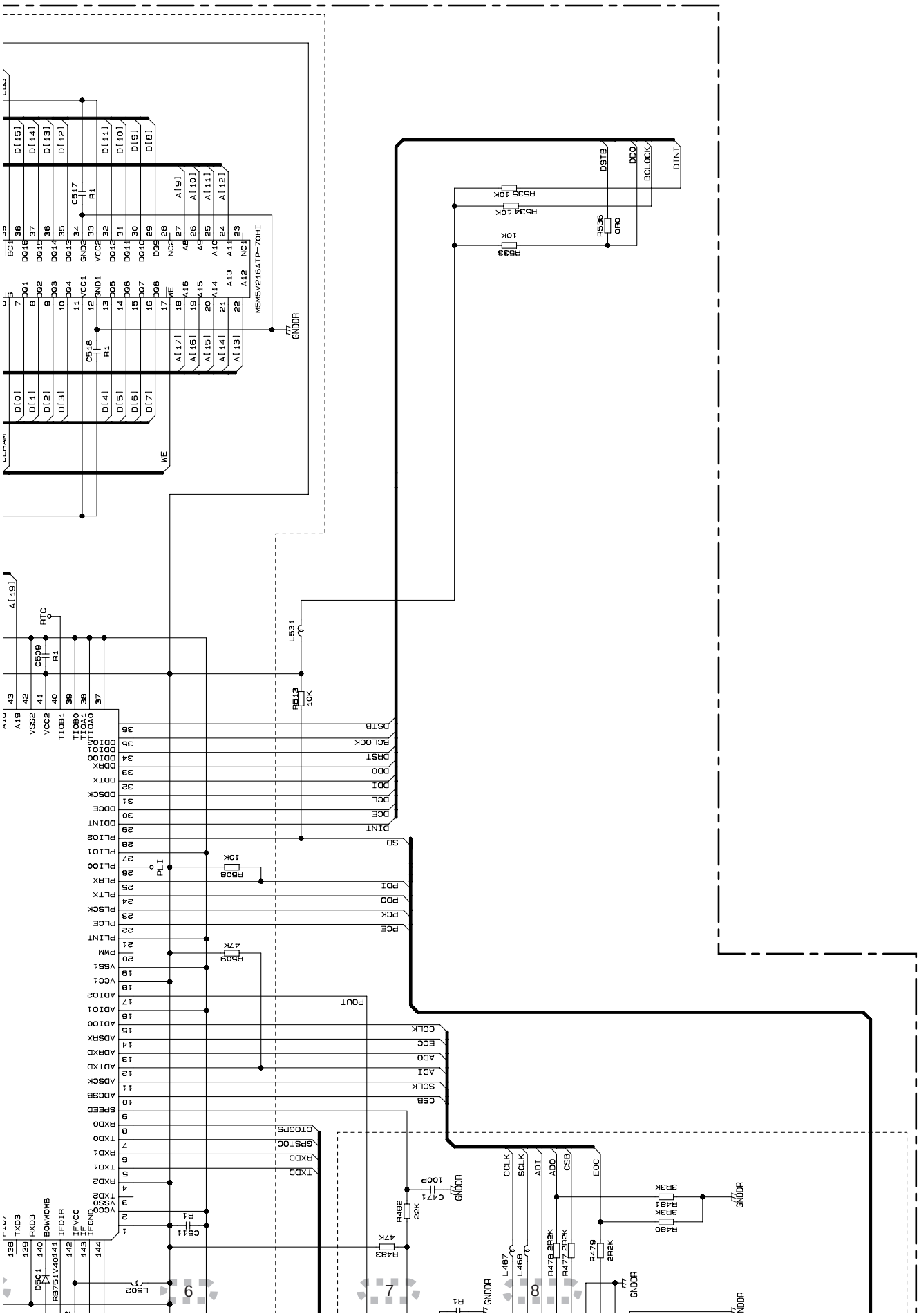

M5M5V216ATP-70HI
GNDDR
DSTB
DDO
BCLOCK
DINT
R535 10K
R534 10K
R536 0R0
R533 10K
L531
R513 10K
RTC
C509 R1
C517 R1
C518 R1
C511 R1
L502
D501
RB751V40141
R508 10K
R509 47K
PLI
POUT
CCLK
EOC
ADO
ADI
SCLK
CSB
CTOGPS
GPSTOC
RXDD
TXDD
R482 22K
R483 47K
C471 100P
L467
L468
R478 2R2K
R477 2R2K
R479 2R2K
R480 3R3K
R481 3R3K

B-a B-b

B-b

3.10 DVD CORE UNIT(MS3R)(GUIDE PAGE)

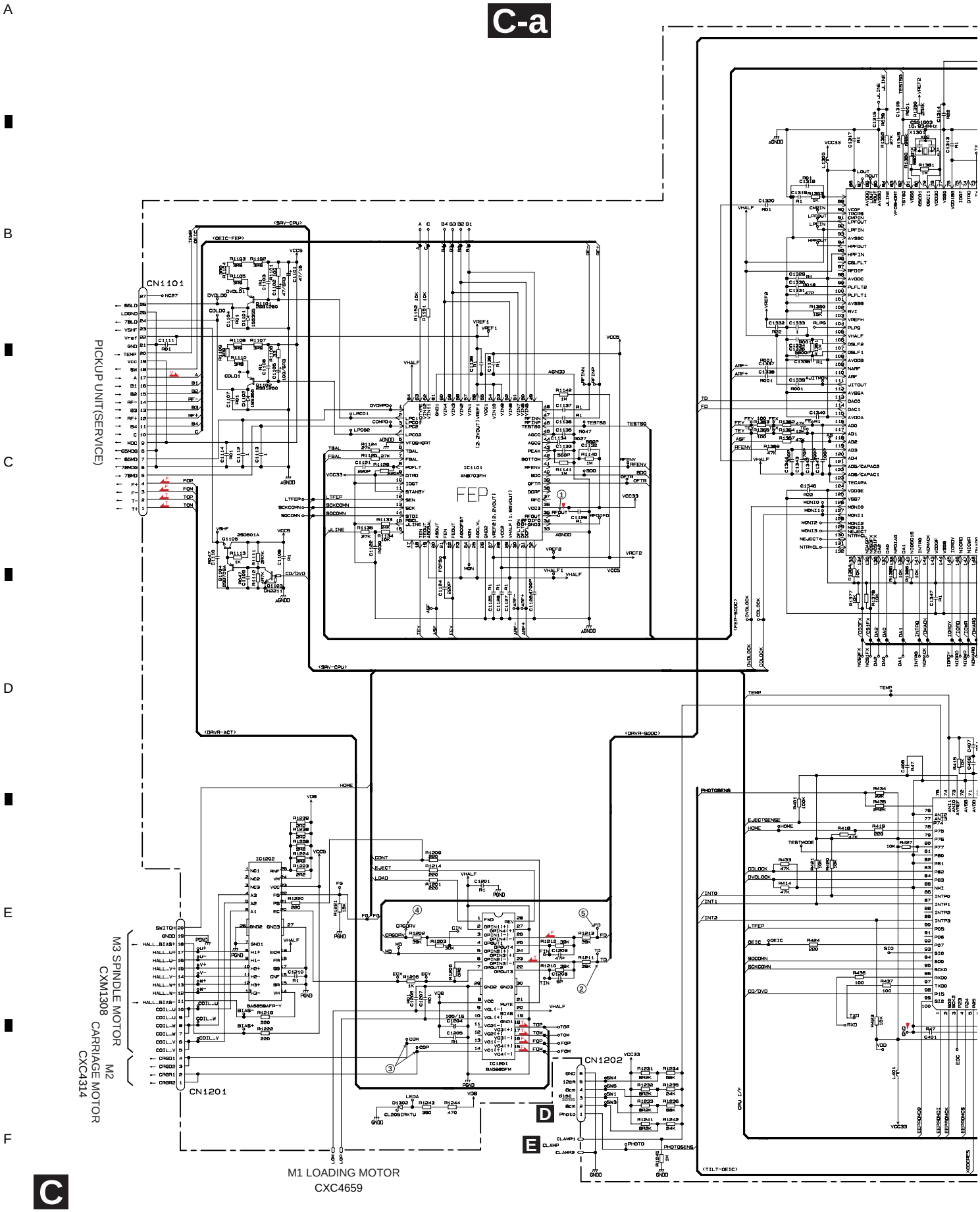

C-b

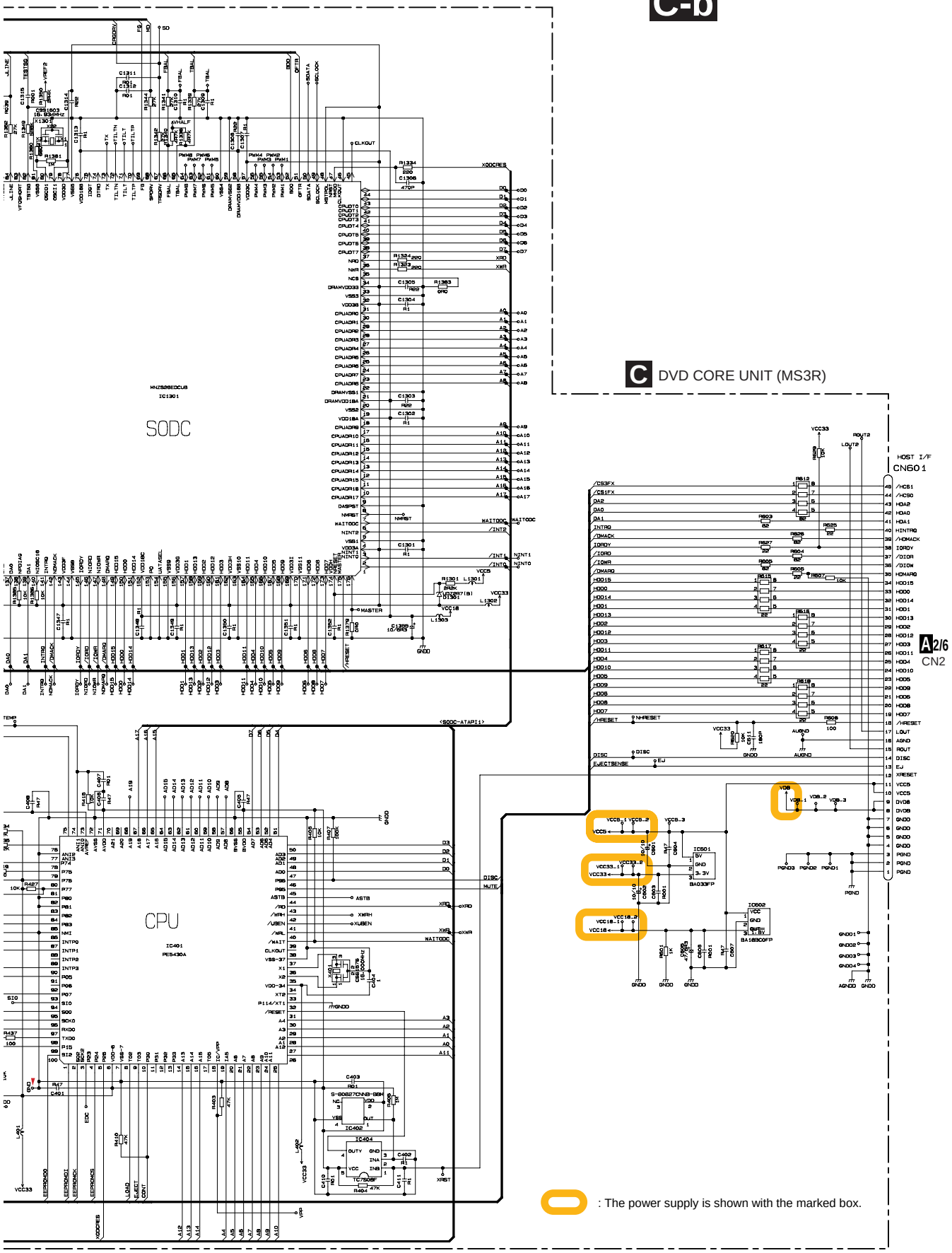
C DVD CORE UNIT (MS3R)
SODC
IC1301
CPU
IC401
PE5430A
HOST I/F
CN601
A2/6
CN2
: The power supply is shown with the marked box.

A B C D E F

C-b

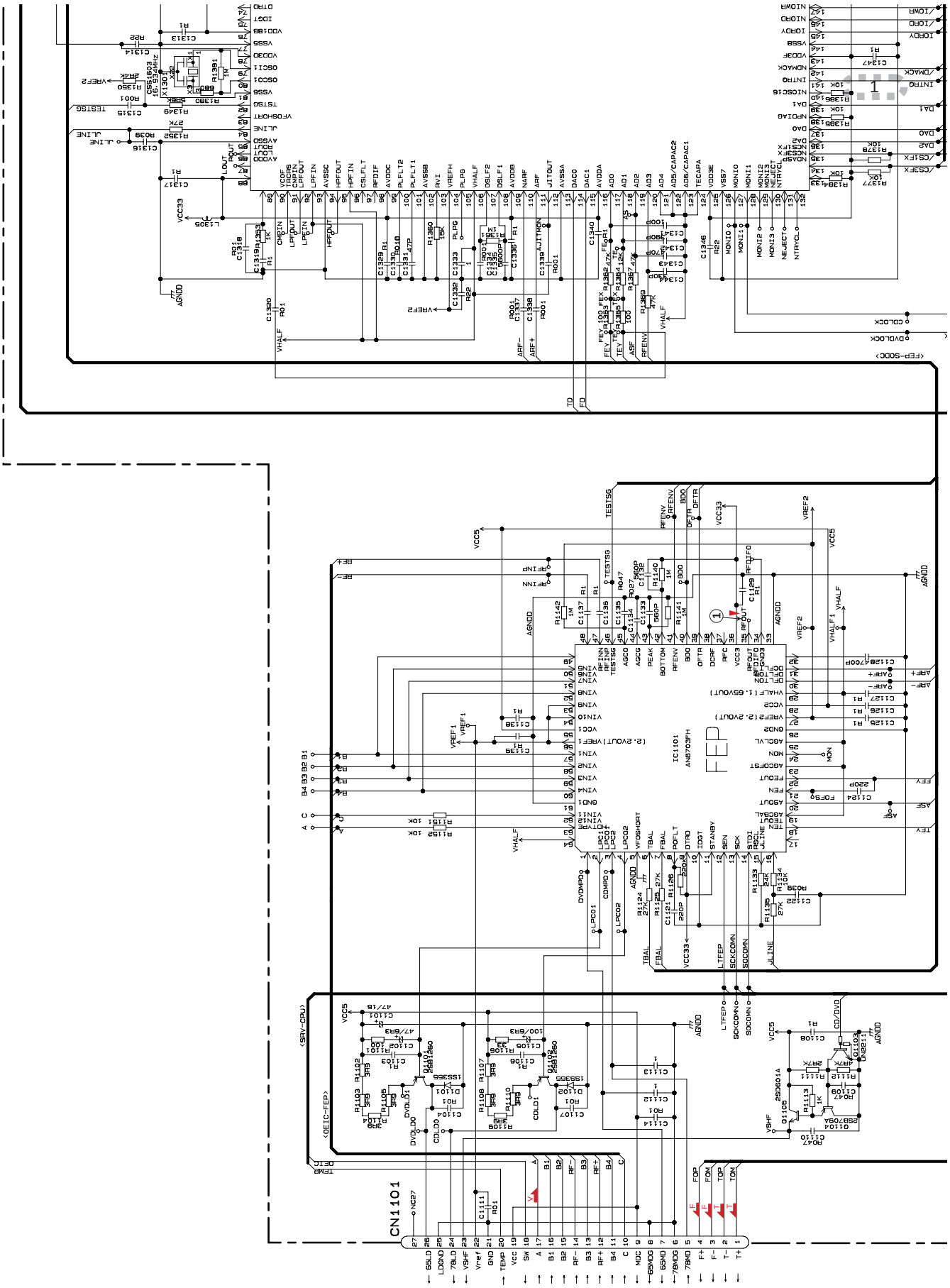

C-a C-b

C-a

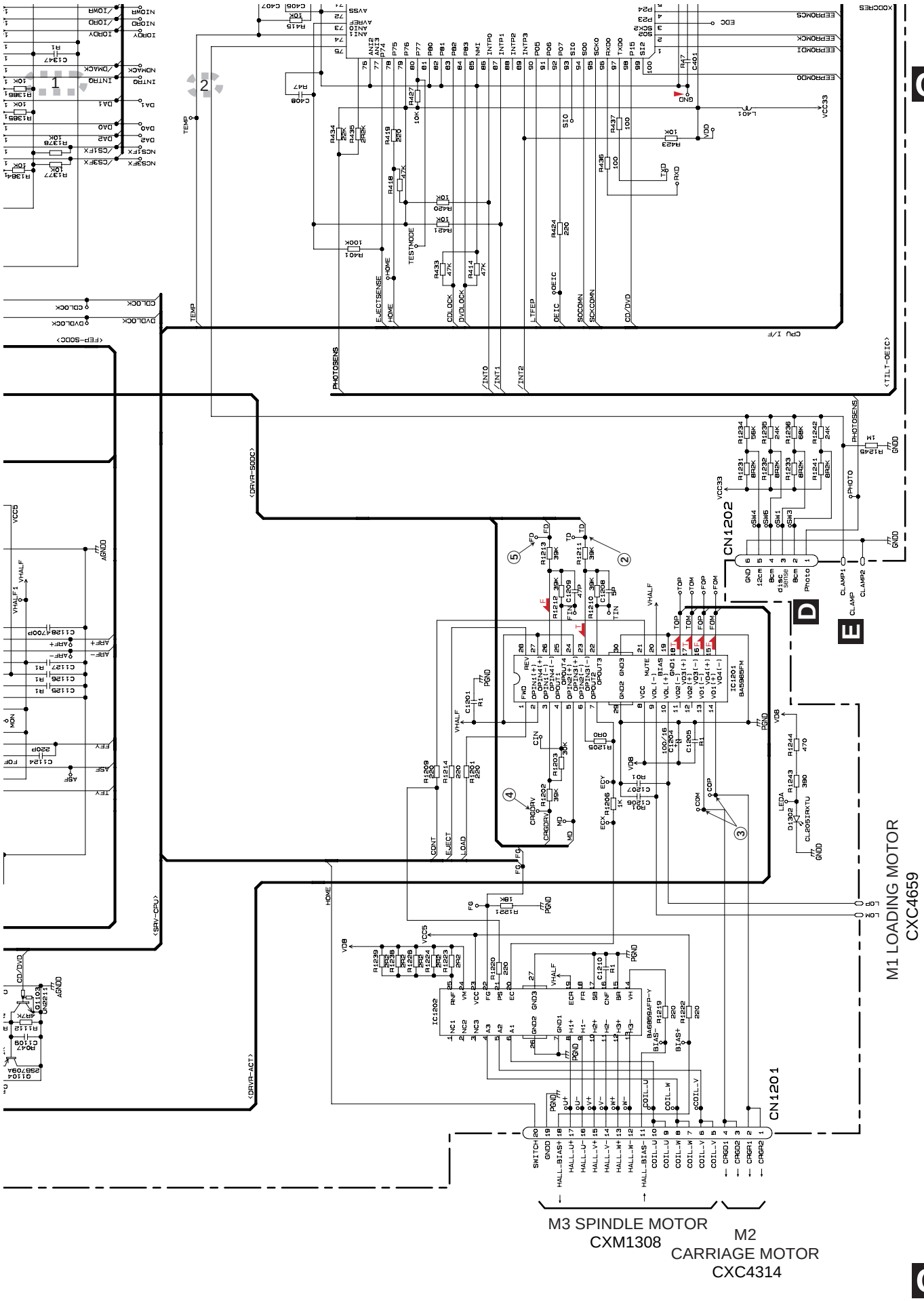
C-b
C-a
M1 LOADING MOTOR
CXC4659
M3 SPINDLE MOTOR
CXM1308
M2
CARRIAGE MOTOR
CXC4314
CN1202
CN1201
IC1201
BA5985FM
IC1202
BA6859AFP-Y
D
E
1
2
3
4
5

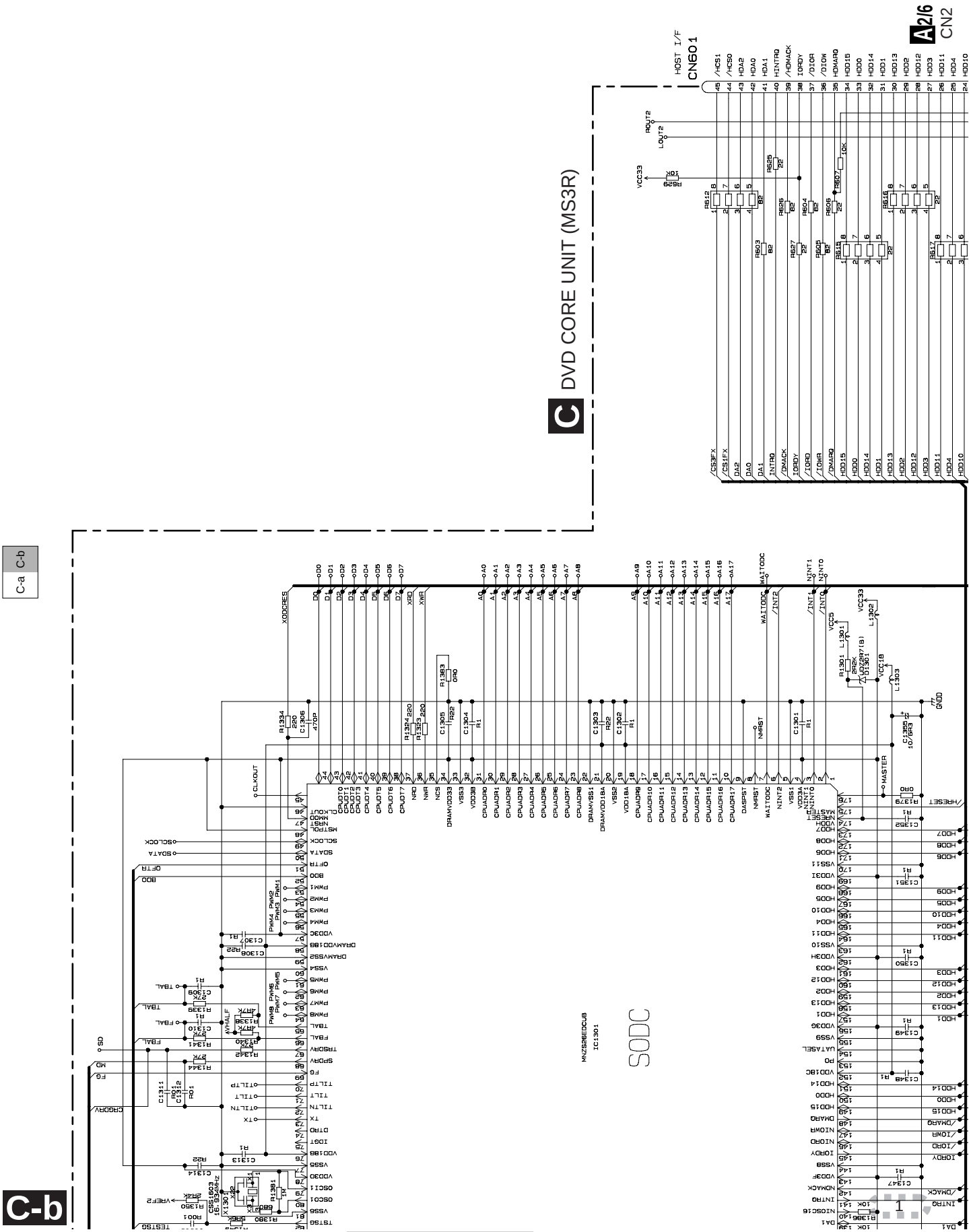
A2/6
CN2
HOST I/F
CN601
C DVD CORE UNIT (MS3R)
C-a C-b
C-b
SODC
MNZS26EDCUB
IC1301

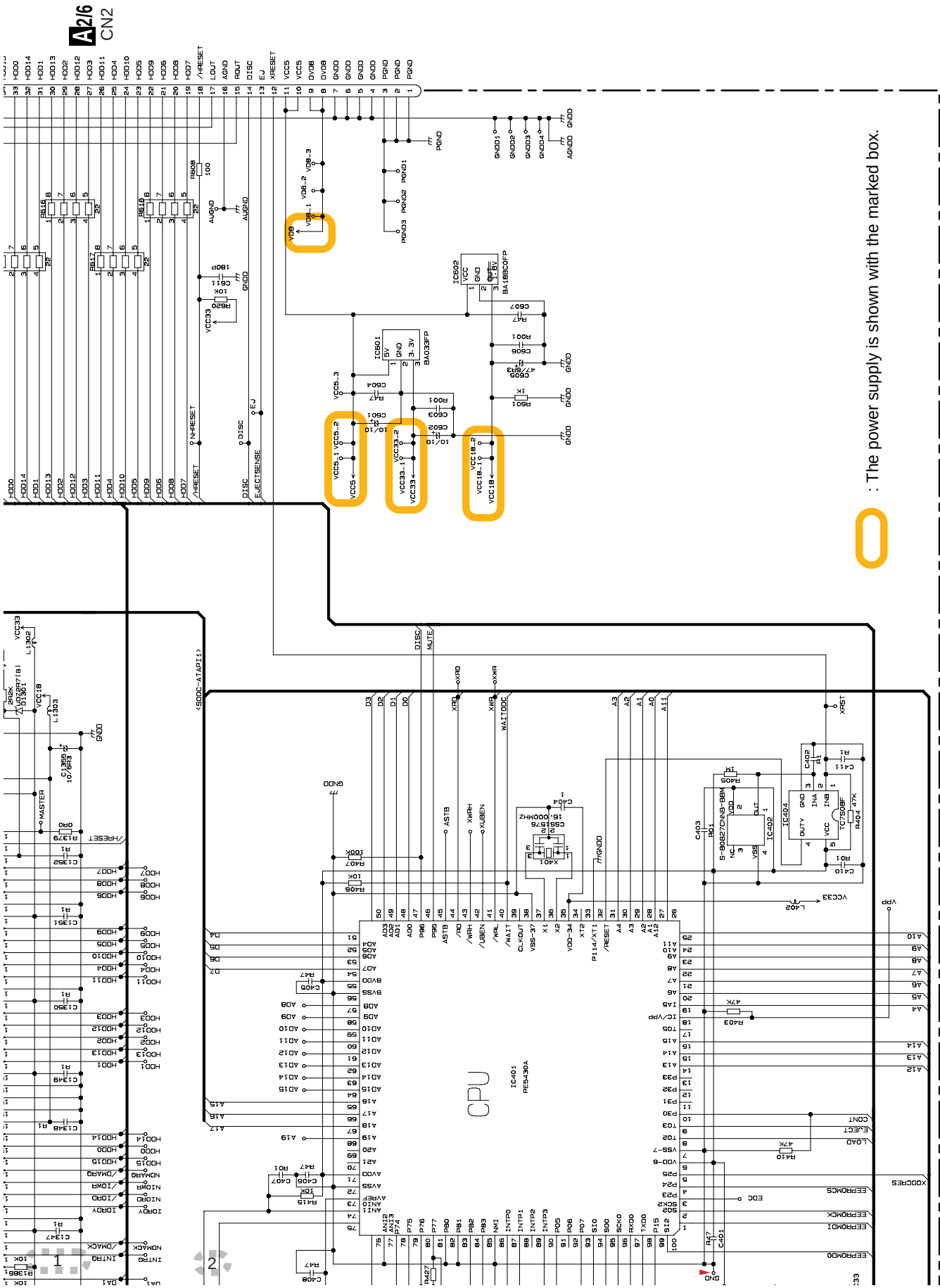
A2/6
CN2
CPU
IC401
PE5430A
: The power supply is shown with the marked box.

C-a C-b

C-b

● Waveforms

Note:1. The encircled number denote measuring pointes in the circuit diagram.
2. Reference voltage VHALF : 1.65V(TD1,FD1,CRGDRV)
: 2V Center(ANAMONI1)
In this waveform, it is seeing on the GND standard.
Offset of 1.65V or 2V is put in.

① RFOUT CDRF 0.2V/div. 0.1μs/div. 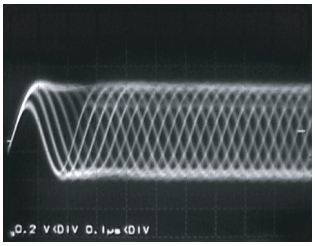 VHALF→	① RFOUT DVDRF 0.2V/div. 0.1μs/div. 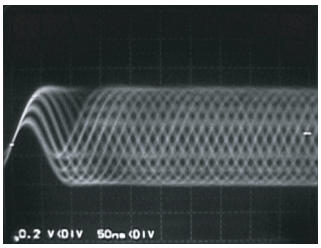 VHALF→	① RFOUT DVDRF(BD1mm) 0.5V/div. 100μs/div. 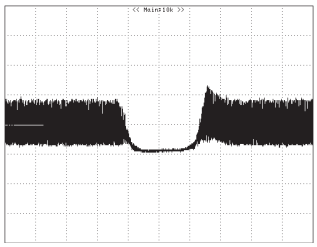 VHALF→
② TD Interval 0.2V/div. 100μs/div. 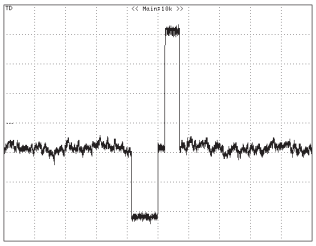 VHALF→	② TD Interval FWD 0.5V/div. 100μs/div. 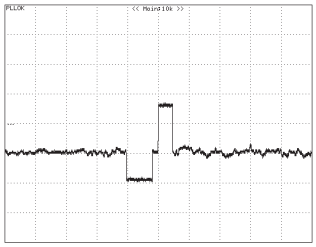 VHALF→	② TD Interval REV 0.5V/div. 100μs/div. 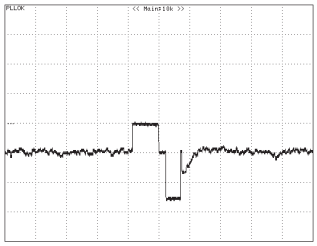 VHALF→
② CH1: TD 0.5V/div.5ms/div. ③ CH2: COP-COM 2.0V/div.5ms/div. Traverse501FWD 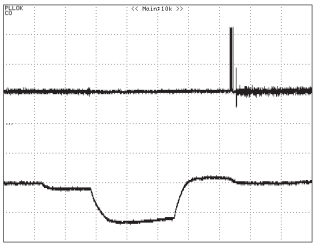 VHALF→ VHALF→	② CH1: TD 0.5V/div.5ms/div. ③ CH2: COP-COM 2.0V/div.5ms/div. Traverse501REV 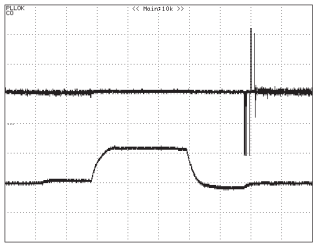 VHALF→ VHALF→	② CH1: TD 0.5V/div.5ms/div. ③ CH2: COP-COM 2.0V/div.5ms/div. Traverse5000FWD 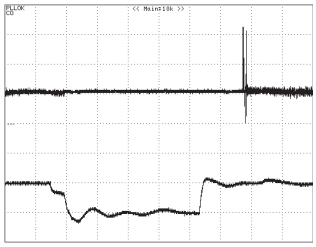 VHALF→ VHALF→

② CH1: TD 0.5V/div.5ms/div.
③ CH2: COP-COM 2.0V/div.5ms/div.
Traverse5000REV

VHALF→
VHALF→

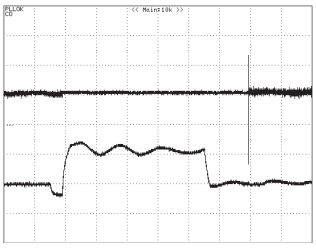

② TD 0.5V/div.500µs/div.
Multi 32FWD

VHALF→

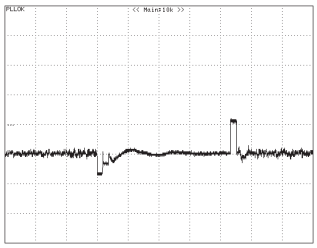

② TD 0.5V/div.500µs/div.
Multi 32REV

VHALF→

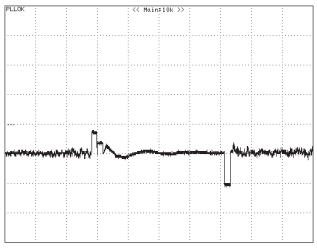

② TD 0.5V/div.20ms/div.
Play TD

VHALF→

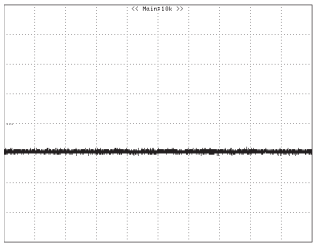

④ CRGPRV 0.5V/div. 100µs/div.
ID search Insaide → Outside

VHALF→

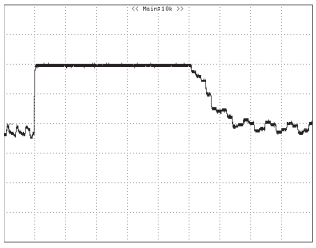

⑤ FD 0.5V/div. 1ms/div.
Focus close

VHALF→

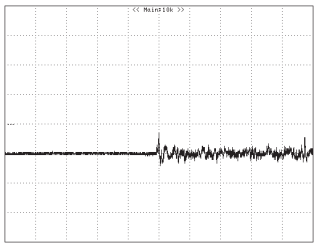

⑤ FD 0.5V/div.500µs/div.
Focus jamp L 0 → L1

VHALF→

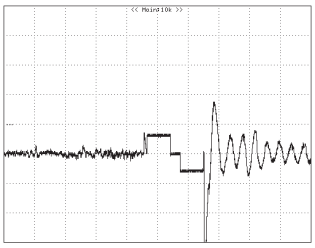

⑤ FD 0.5V/div.500µs/div.
Focus jamp L1 → L 0

VHALF→

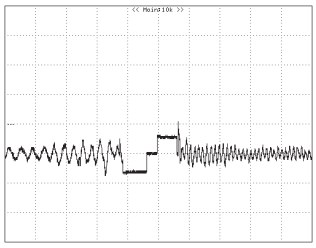

⑤ FD 0.5V/div.20ms/div.
Play TD

VHALF→

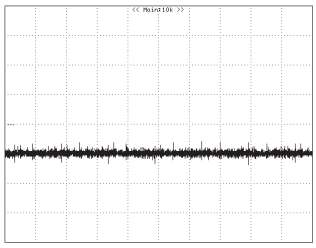

3.11 COMPOUND UNIT(A) AND COMPOUND UNIT(B)

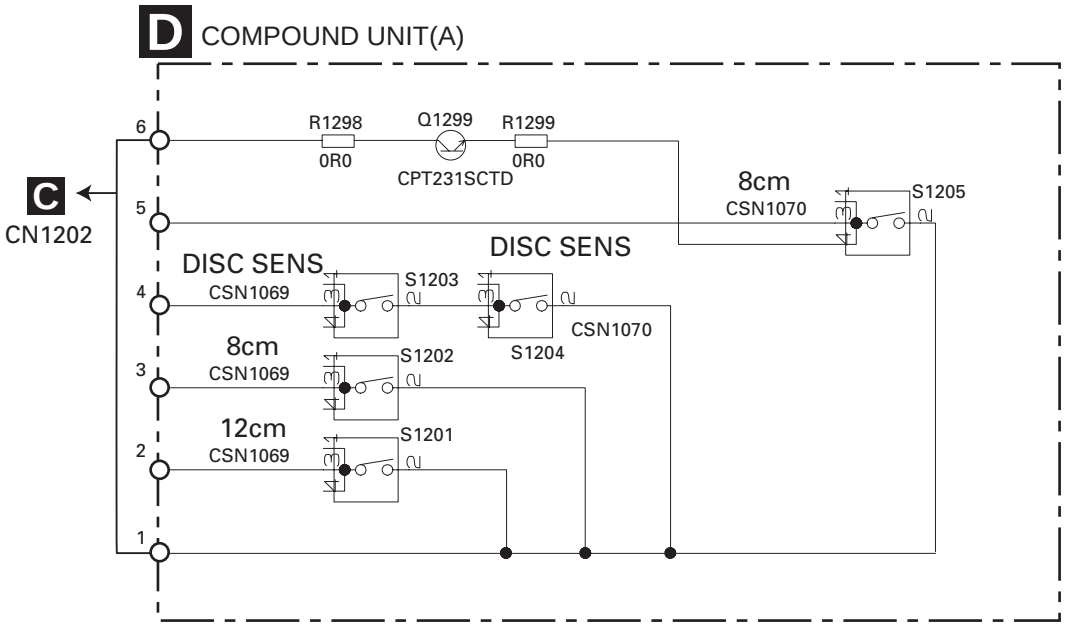

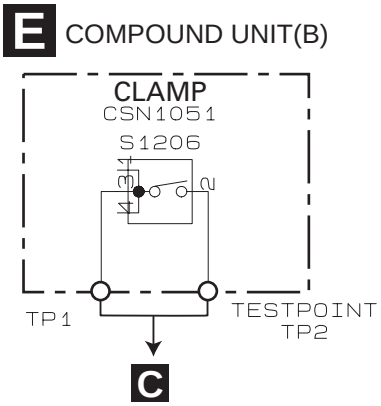

D E

3.12 PU UNIT(REFERENCE)

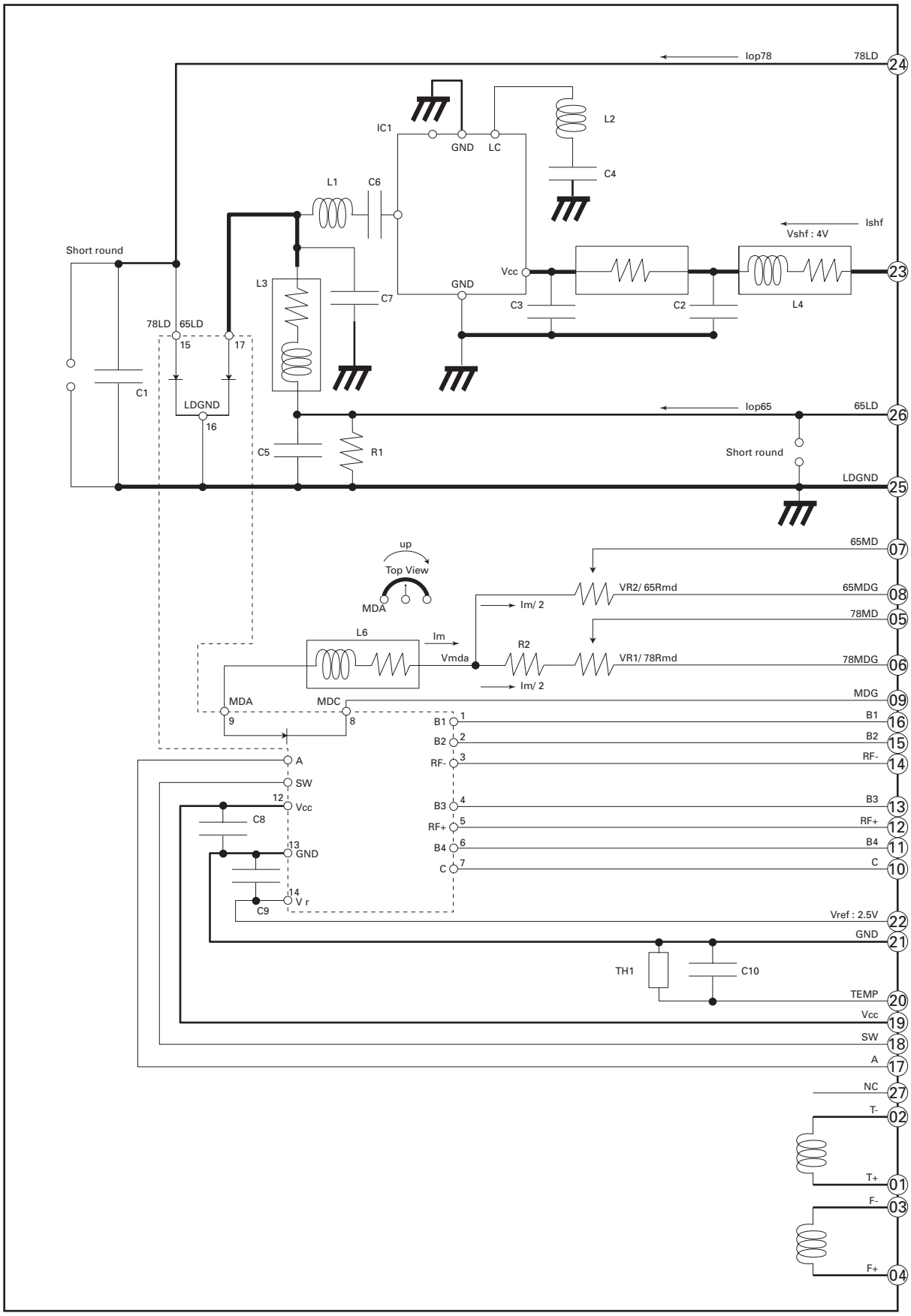

C

CN1101

3.13 CD MECHANISM MODULE(GUIDE PAGE)

F-a

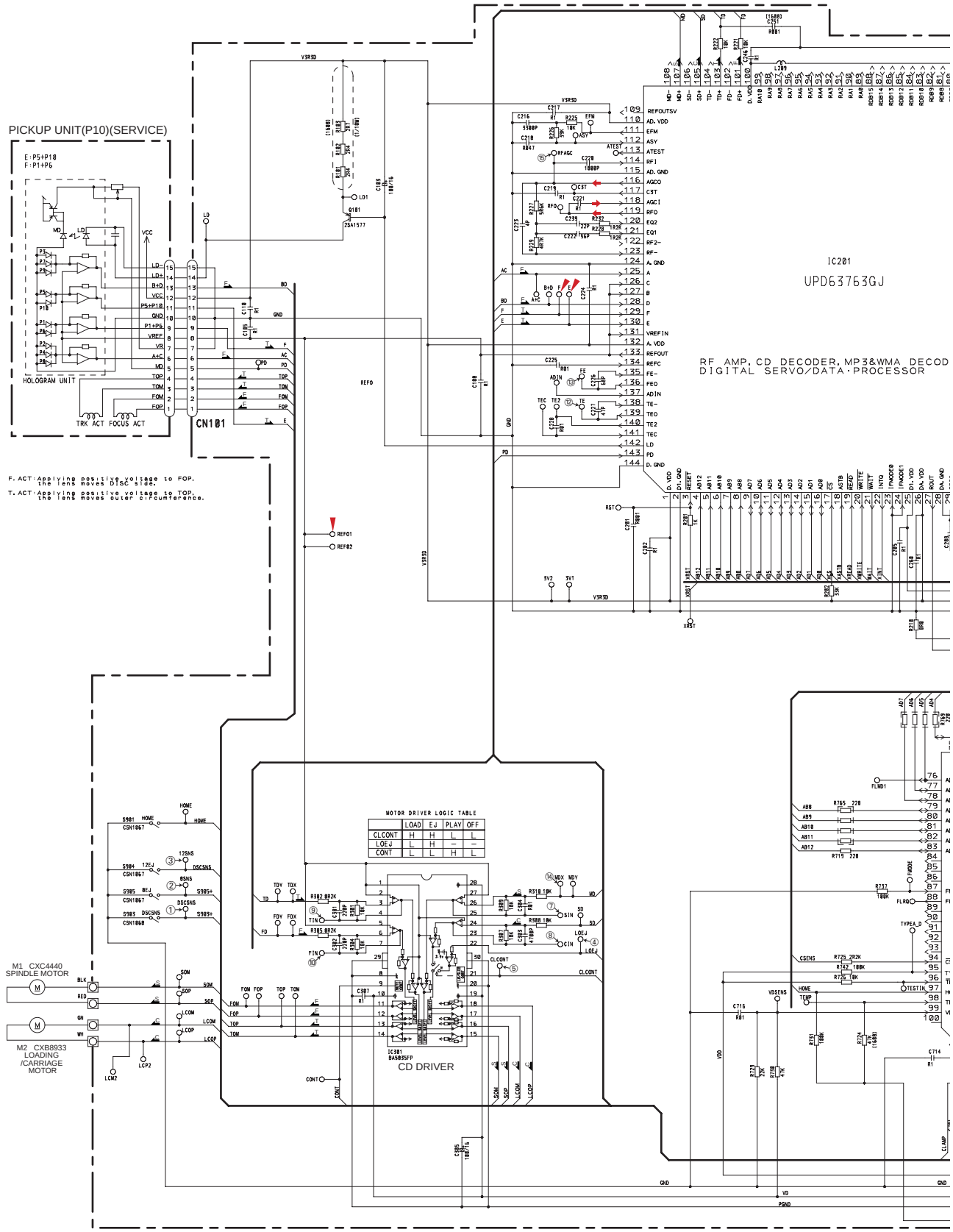

F

F-b

NOTE1) GND ...CD LSI, RFAMP, CPU
PGND ...Actuator, Motor Driver
AGND ...Audio
These GND's are not connected to each other on PCB.
PGND is connected to a floating mechanism part by a screw.

Monitor land(ø1.2mm)
Monitor land(ø0.8mm)
Land for manual soldering

SWITCHES:
CD CORE UNIT(S10.1)
S901:HOME SWITCH.....ON-OFF
S903:DSCSNS SWITCH.....ON-OFF
S904:12EJ SWITCH.....ON-OFF
S905:8EJ SWITCH.....ON-OFF

The underlined indicates the switch position.

SIGNAL LINE
FOCUS SERVO LINE
TRACKING SERVO LINE
CARRIAGE SERVO LINE
SPINDLE SERVO LINE

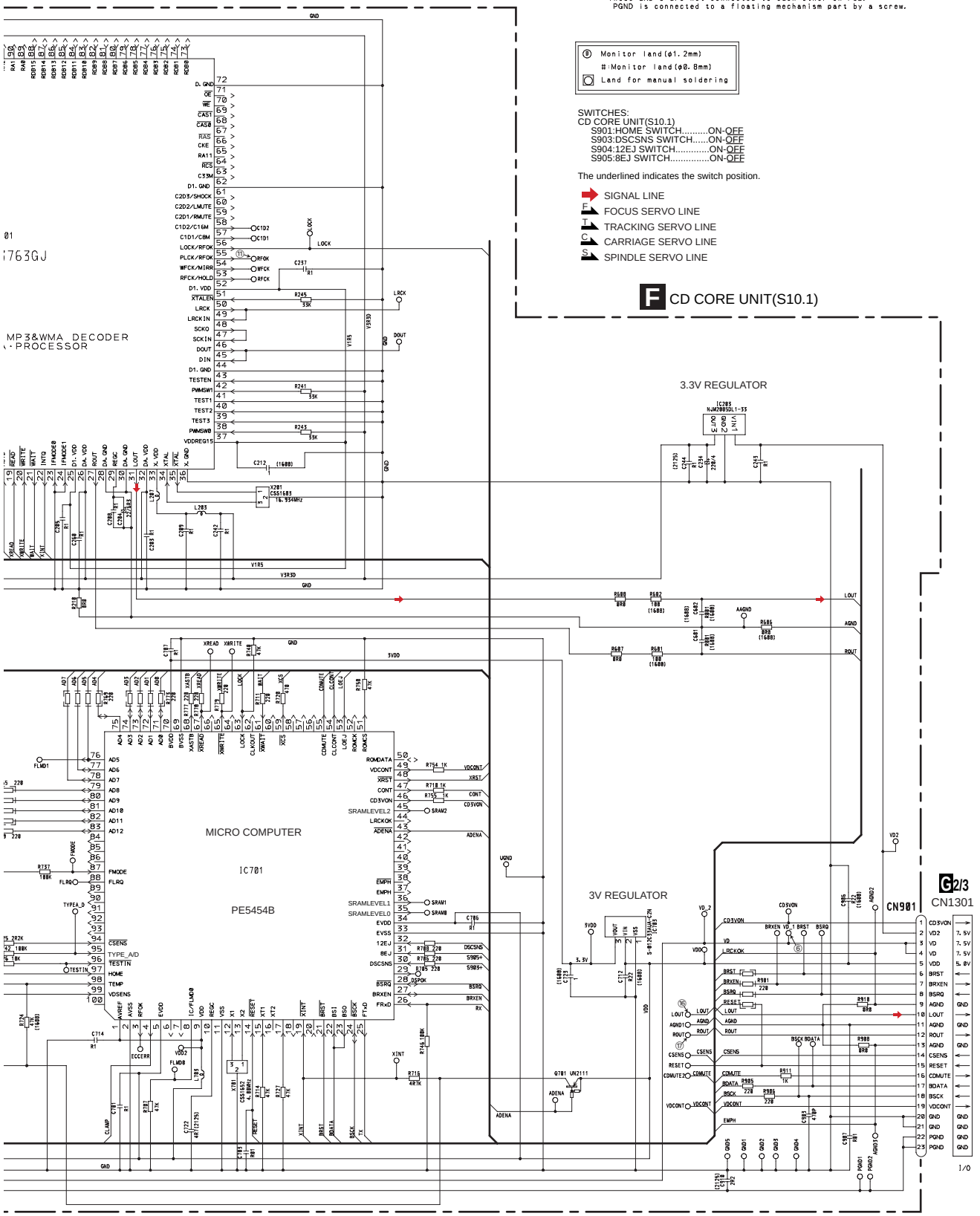

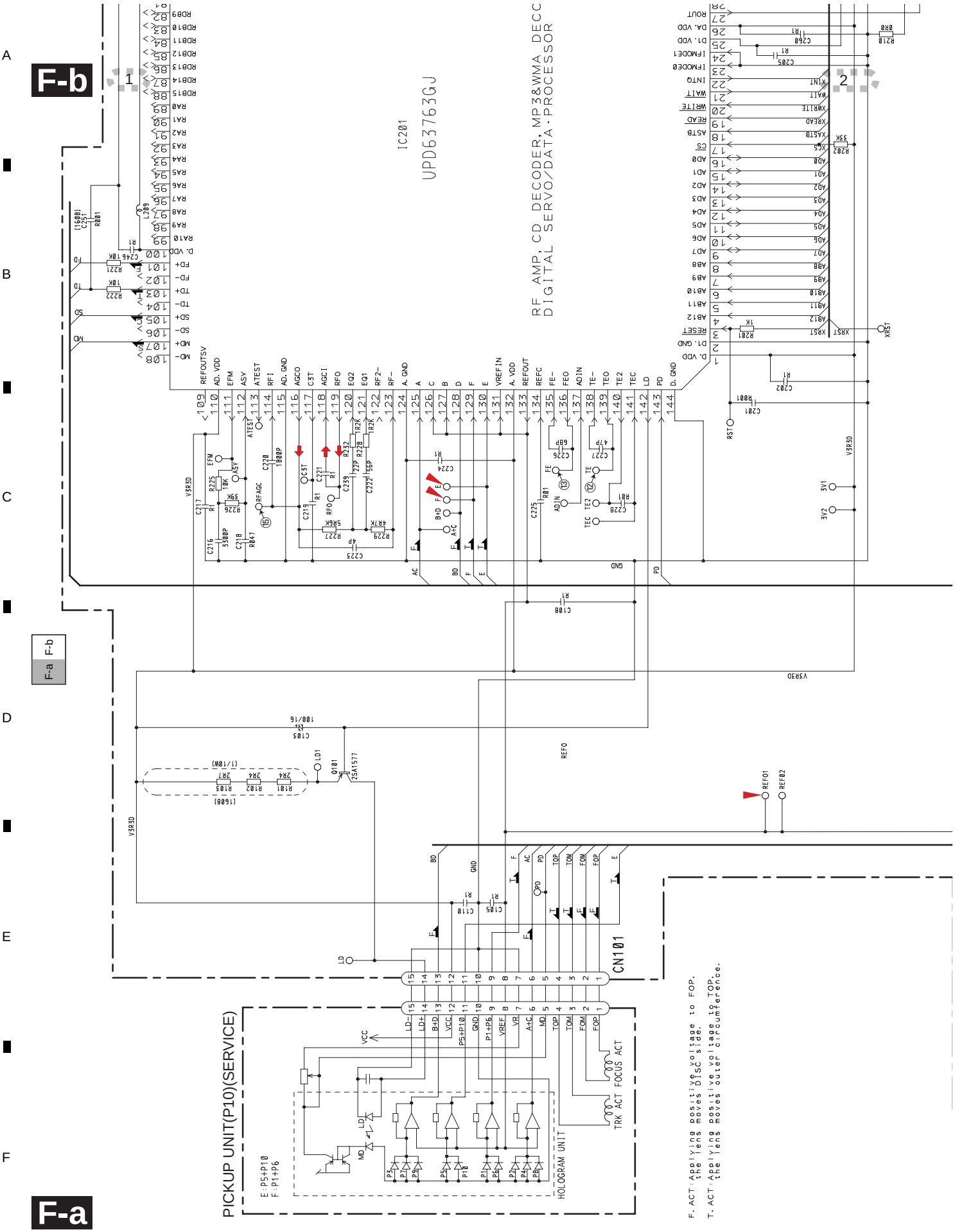
F-b
F-a
IC201
UPD63763GJ
RF AMP, CD DECODER, MP3&WMA DECC
DIGITAL SERVO/DATA·PROCESSOR
CN101
PICKUP UNIT(P10)(SERVICE)
HOLOGRAM UNIT
TRK ACT FOCUS ACT
F. ACT: Applying positive voltage to FOP. the lens moves DISC side.
T. ACT: Applying positive voltage to TOP. the lens moves outer circumference.

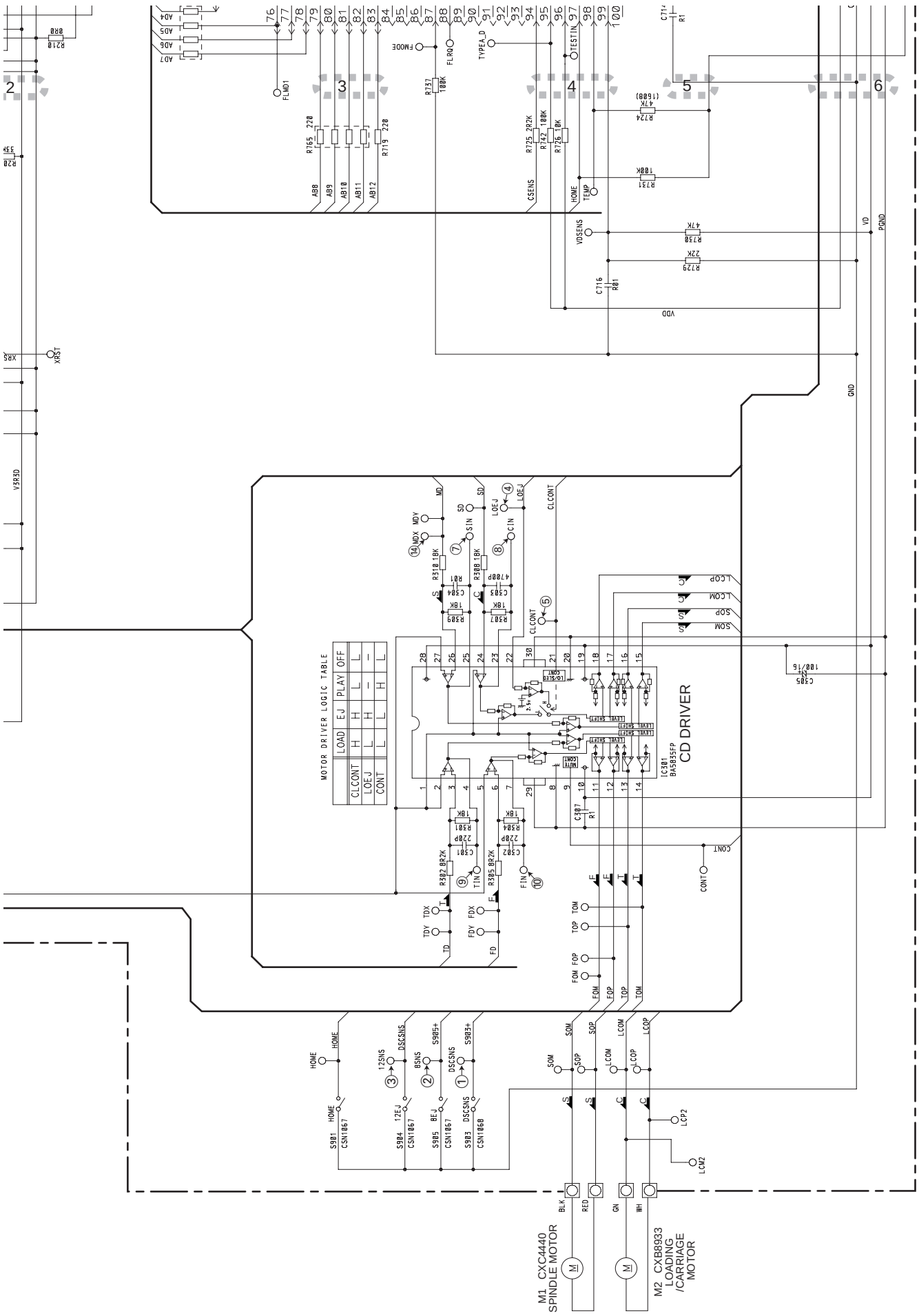

F-b
F-a
CD DRIVER
IC301
BA5835FP
MOTOR DRIVER LOGIC TABLE
LOAD
EJ
PLAY
OFF
CLCONT
LOEJ
CONT
M1 CXC4440
SPINDLE MOTOR
M2 CXB8933
LOADING
/CARRIAGE
MOTOR

F-b

F-a F-b

NOTE1) GND ...CD LSI, RFAMP, CPU
PGND ...Actuator, Motor Driver
AGND ...Audio
These GND's are not connected to each other on PCB.
PGND is connected to a floating mechanism part by a screw.

Ⓑ Monitor land(φ1.2mm)
#:Monitor land(φ0.8mm)
Land for manual soldering

SWITCHES:
CD CORE UNIT(S10.1)
S901:HOME SWITCH.....ON-OFF
S903:DSCSNS SWITCH.....ON-OFF
S904:12EJ SWITCH.....ON-OFF
S905:8EJ SWITCH.....ON-OFF

The underlined indicates the switch position.

SIGNAL LINE
FOCUS SERVO LINE
TRACKING SERVO LINE
CARRIAGE SERVO LINE
SPINDLE SERVO LINE

F CD CORE UNIT(S10.1)

AVIC-D1/UC

3.3V REGULATOR

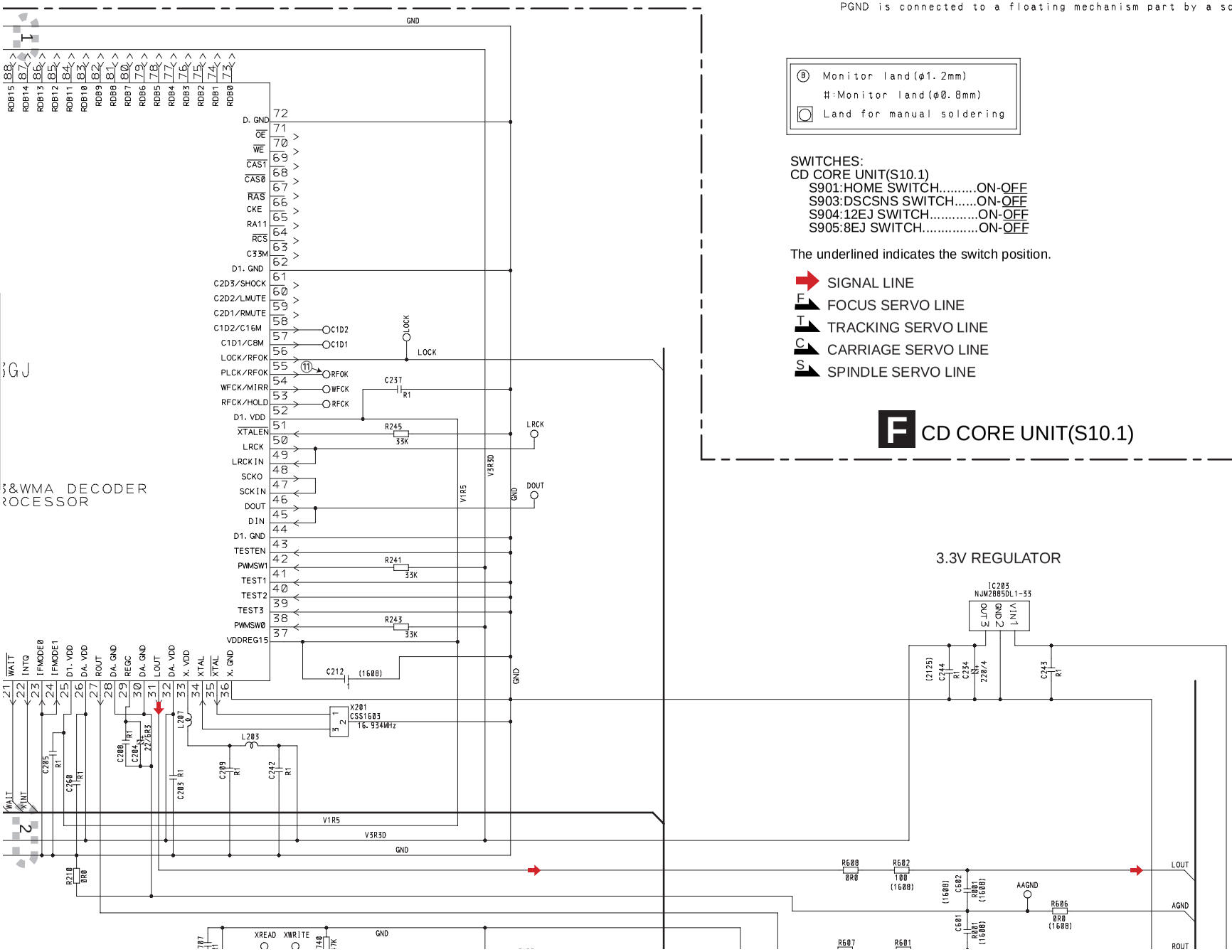

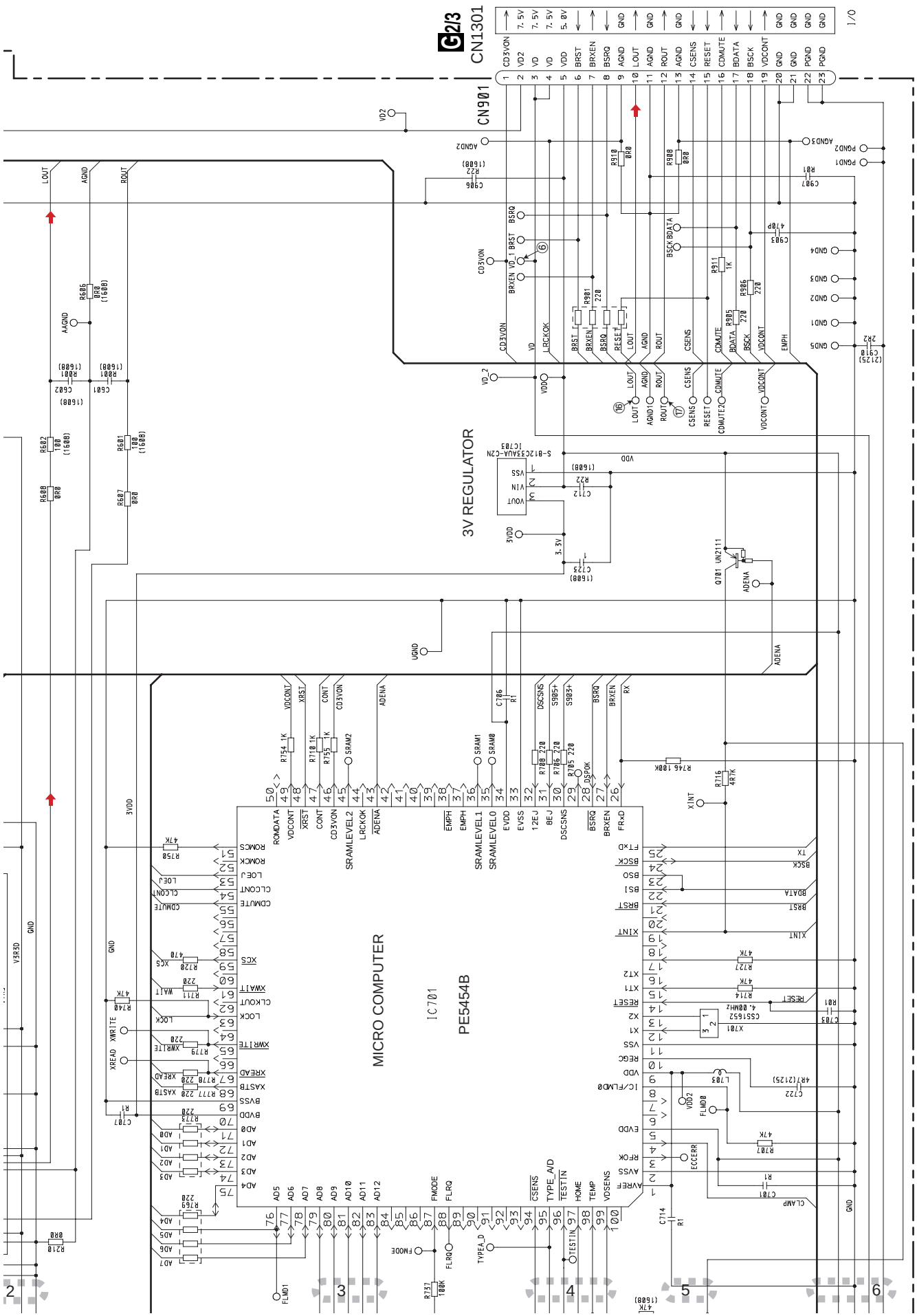
G2/3
CN1301
CN901
3V REGULATOR
MICRO COMPUTER
IC701
PE5454B
F-a
F-b

● Waveforms

Note : 1. The encircled numbers denote measuring points in the circuit diagram.
2. Reference voltage REFO1(1.65V)

① DSCSNS 5V/div 500ms/div
② 8SNS 5V/div
③ 12SNS 5V/div
④ LOEJ 5V/div

12 cm CD Loading operation

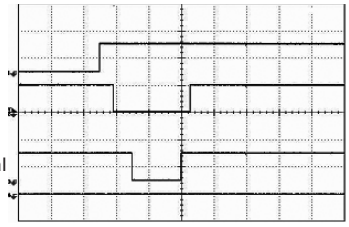

① DSCSNS 5V/div 500ms/div
⑤ CLCONT 5V/div
④ LOEJ 5V/div
⑥ VD 10V/div

12 cm CD Loading operation

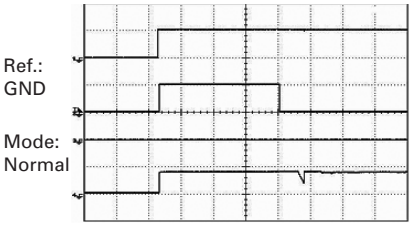

① DSCSNS 5V/div 500ms/div
② 8SNS 5V/div
③ 12SNS 5V/div
④ LOEJ 5V/div

8 cm CD Loading operation

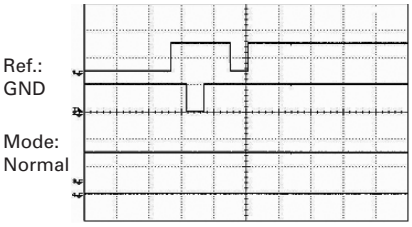

⑦ SIN 1V/div 2s/div
⑧ CIN 500mV/div
⑨ TIN 500mV/div

12 cm CD-DA setup operation after loading

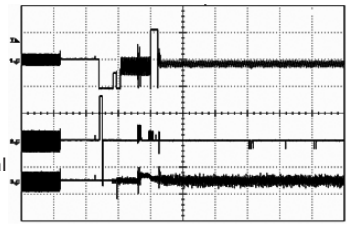

⑦ SIN 1V/div 1s/div
⑧ CIN 500mV/div
⑨ TIN 500mV/div

12 cm CD-ROM(1 session) setup operation after loading

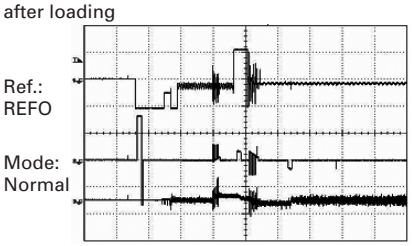

⑦ SIN 1V/div 2s/div
⑧ CIN 500mV/div
⑨ TIN 500mV/div

12 cm CD-ROM(3 sessions) setup operation after loading

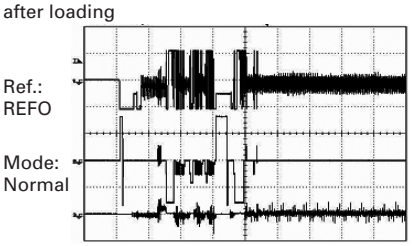

⑩ FIN 200mV/div 500ms/div
⑪ RFOK 2V/div
⑦ SIN 2V/div

12 cm CD-DA Source On setup operation

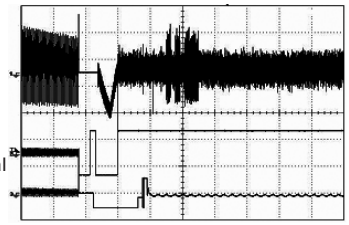

⑫ TE 500mV/div 200ms/div
⑬ FE 500mV/div

Source On setup operation

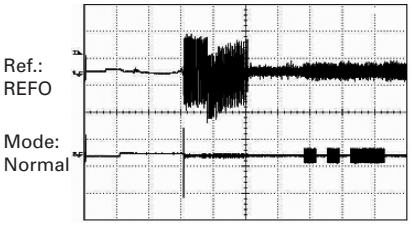

⑬ FE 500mV/div 20ms/div
⑩ FIN 500mV/div
⑫ TE 500mV/div
⑨ TIN 500mV/div

CD-DA Play operation

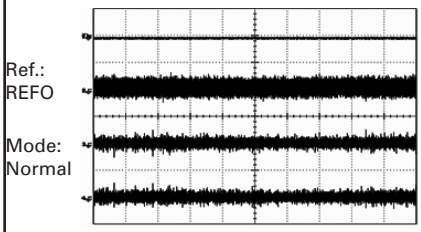

⑬ FE 500mV/div 20ms/div
⑩ FIN 500mV/div
⑫ TE 500mV/div
⑨ TIN 500mV/div

CD-ROM play operation(Regular track Jump)

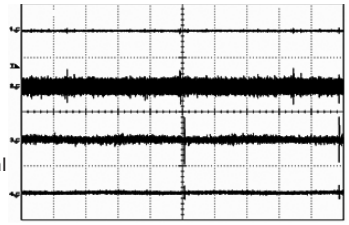

⑭ MDX 1V/div 50ms/div
⑦ SIN 200mV/div

Spindle waveform during play operation

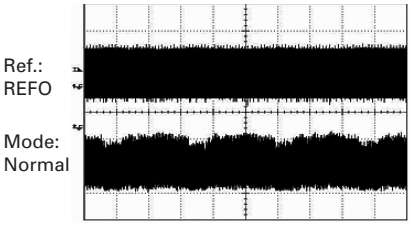

⑭ MDX 2V/div 5µs/div
⑦ SIN 1V/div

Spindle waveform during play operation (Wider)

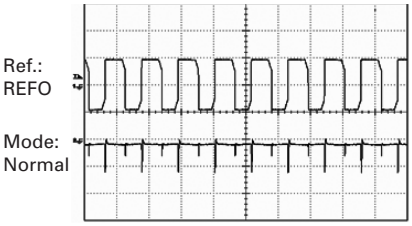

⑩ FIN 500mV/div 200ms/div
⑬ FE 500mV/div

Focus Search waveform

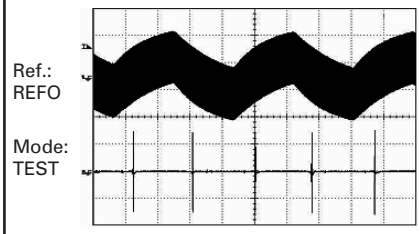

⑫ TE 500mV/div 2ms/div
⑮ RFAGC 500mV/div

Track Open waveform

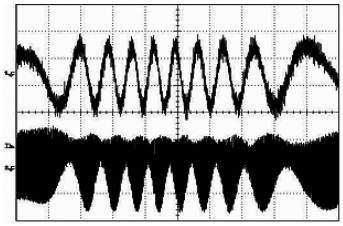

⑮ RFAGC 1V/div 500µs/div
⑫ TE 500mV/div
⑨ TIN 500mV/div

1 Track Jump waveform

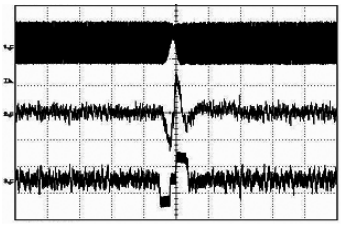

⑮ RFAGC 1V/div 500µs/div
⑫ TE 500mV/div
⑨ TIN 500mV/div

4 Tracks Jump waveform

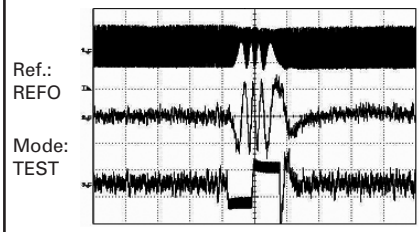

⑮ RFAGC 1V/div 1ms/div
⑫ TE 500mV/div
⑨ TIN 500mV/div

10 Tracks Jump waveform

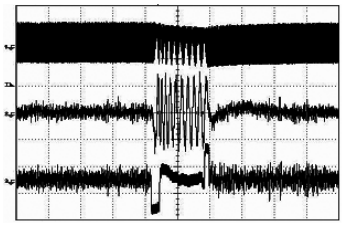

⑮ RFAGC 1V/div 2ms/div
⑫ TE 500mV/div
⑨ TIN 500mV/div

32 Tracks Jump waveform

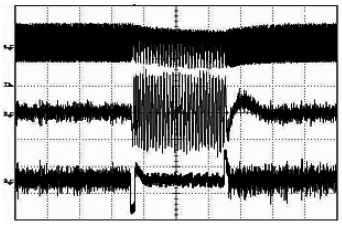

⑮ RFAGC 1V/div 200ms/div
⑫ TE 1V/div
⑧ CIN 500mV/div
⑦ SIN 2V/div

Search operation(Outter to Inner)

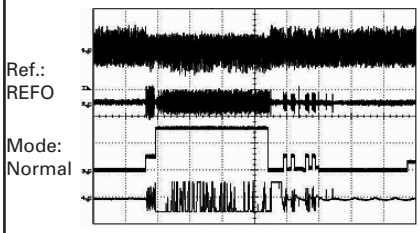

⑯ LOUT 1V/div 200µs/div
⑰ ROUT 1V/div

Analog audio waveform

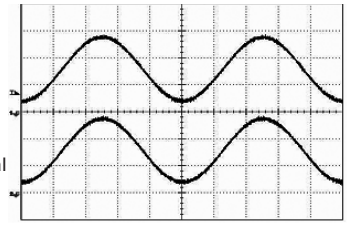

① DSCSNS 5V/div 500ms/div
② 8SNS 5V/div
③ 12SNS 5V/div
④ LOEJ 5V/div

12 cm CD Eject operation

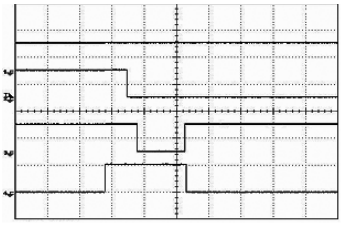

① DSCSNS 5V/div 500ms/div
⑤ CLCONT 5V/div
④ LOEJ 5V/div

12 cm CD Eject operation

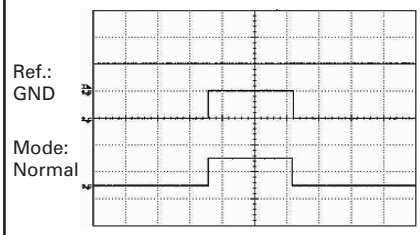

① DSCSNS 5V/div 500ms/div
② 8SNS 5V/div
③ 12SNS 5V/div
④ LOEJ 5V/div

8 cm CD Eject operation

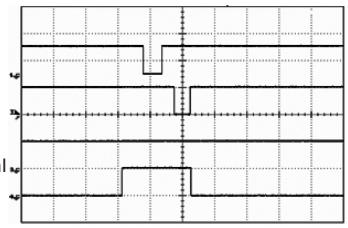

⑦ SIN 1V/div 500ms/div
⑧ CIN 500mV/div
⑨ TIN 500mV/div

CD-DA >> CD-ROM mode change(Band key)

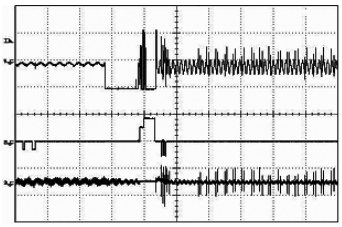

⑦ SIN 1V/div 500ms/div ⑧ CIN 500mV/div ⑨ TIN 500mV/div CD-ROM >> CD-DA mode change(Band key) 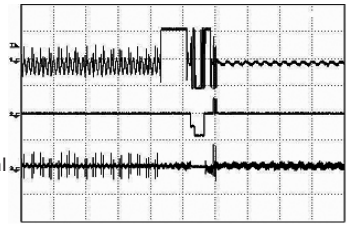 Ref.: REFO Mode: Normal	⑮ RFAGC 1V/div 500μs/div ⑨ TIN 1V/div ⑫ TE 1V/div ⑩ FIN 1V/div Black dot(800μm) during play 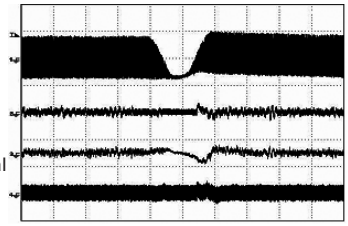 Ref.: REFO Mode: Normal	

3.14 SYSTEM UNIT (AUDIO)

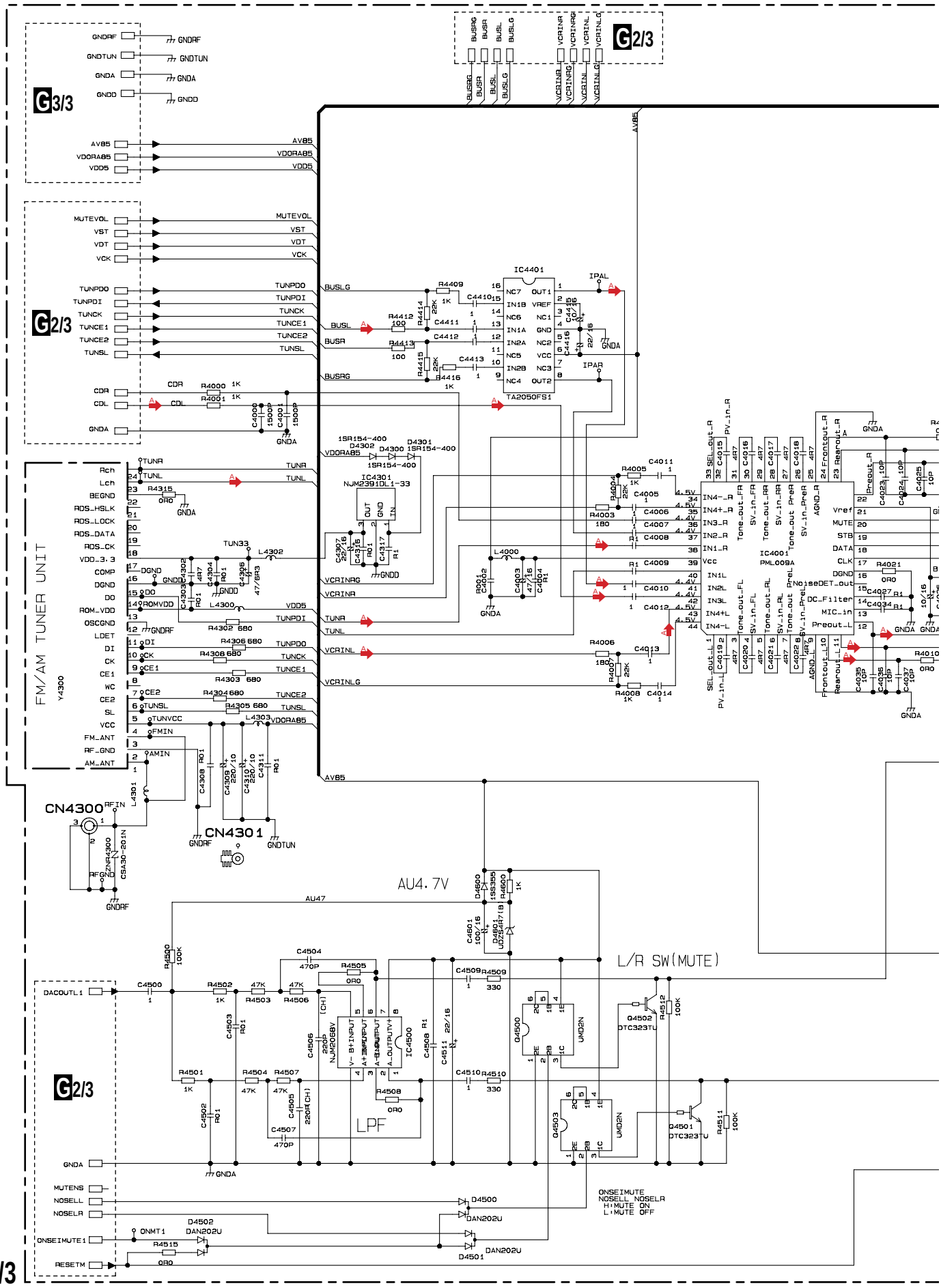

AUDIO SIGNAL

G1/3 SYSTEM UNIT (AUDIO)

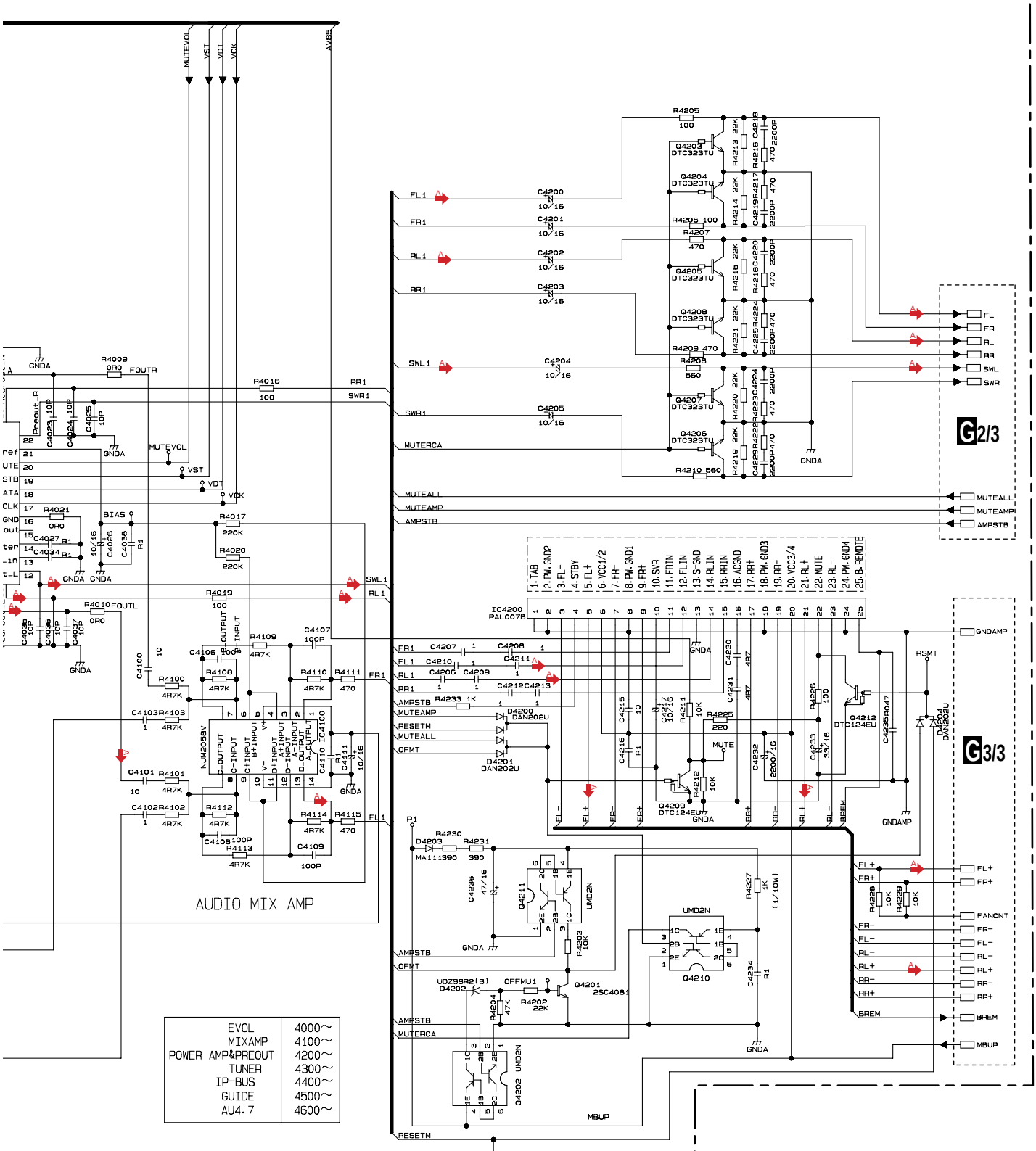

EVOL	4000~
MIXAMP	4100~
POWER AMP&PREOUT	4200~
TUNER	4300~
IP-BUS	4400~
GUIDE	4500~
AU4.7	4600~

G1/3

3.15 SYSTEM UNIT (SYSCOM, VIDEO, I/F)(GUIDE PAGE)

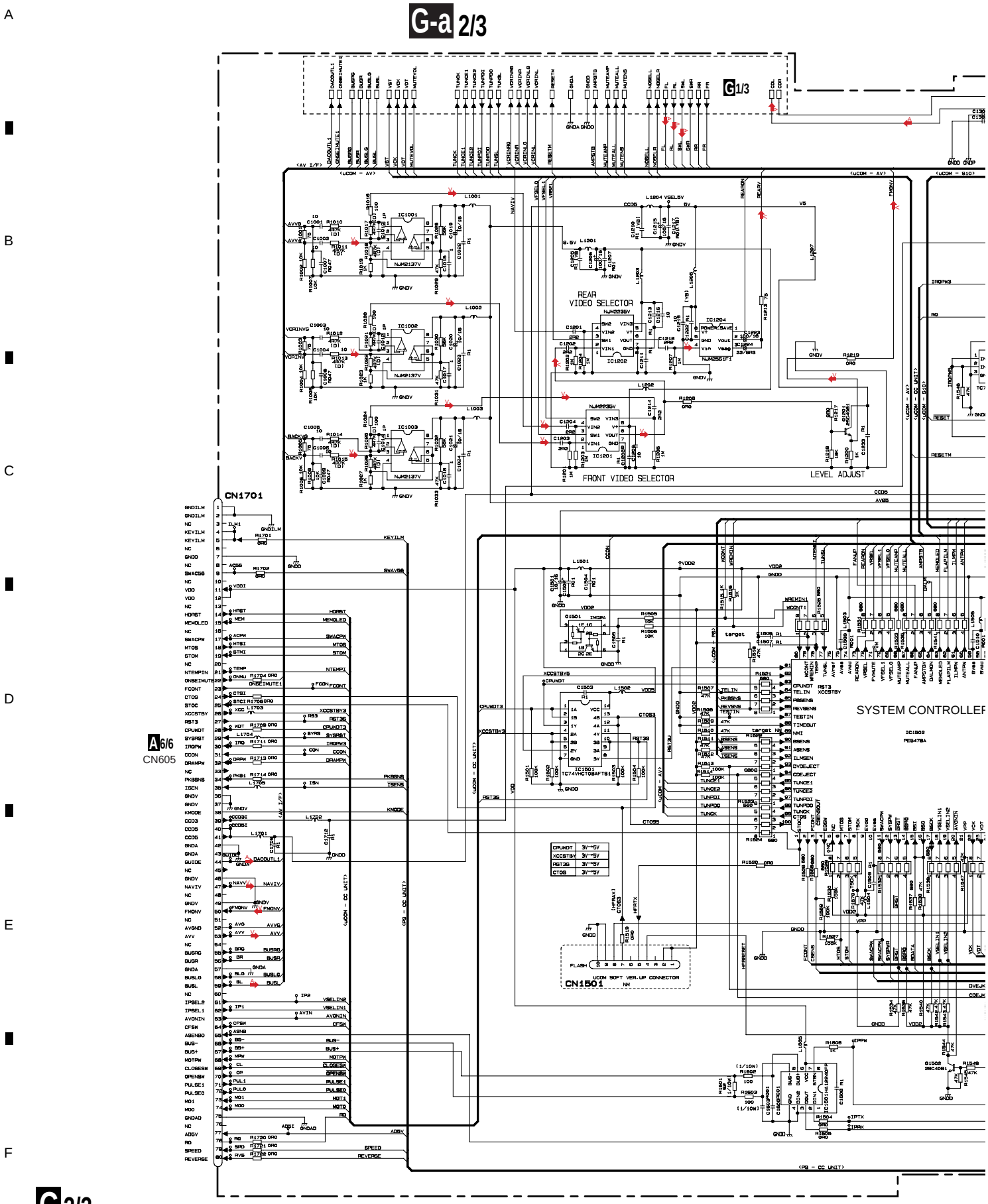

G-b 2/3

G2/3 SYSTEM UNIT (SYSCOM, VIDEO, I/F)

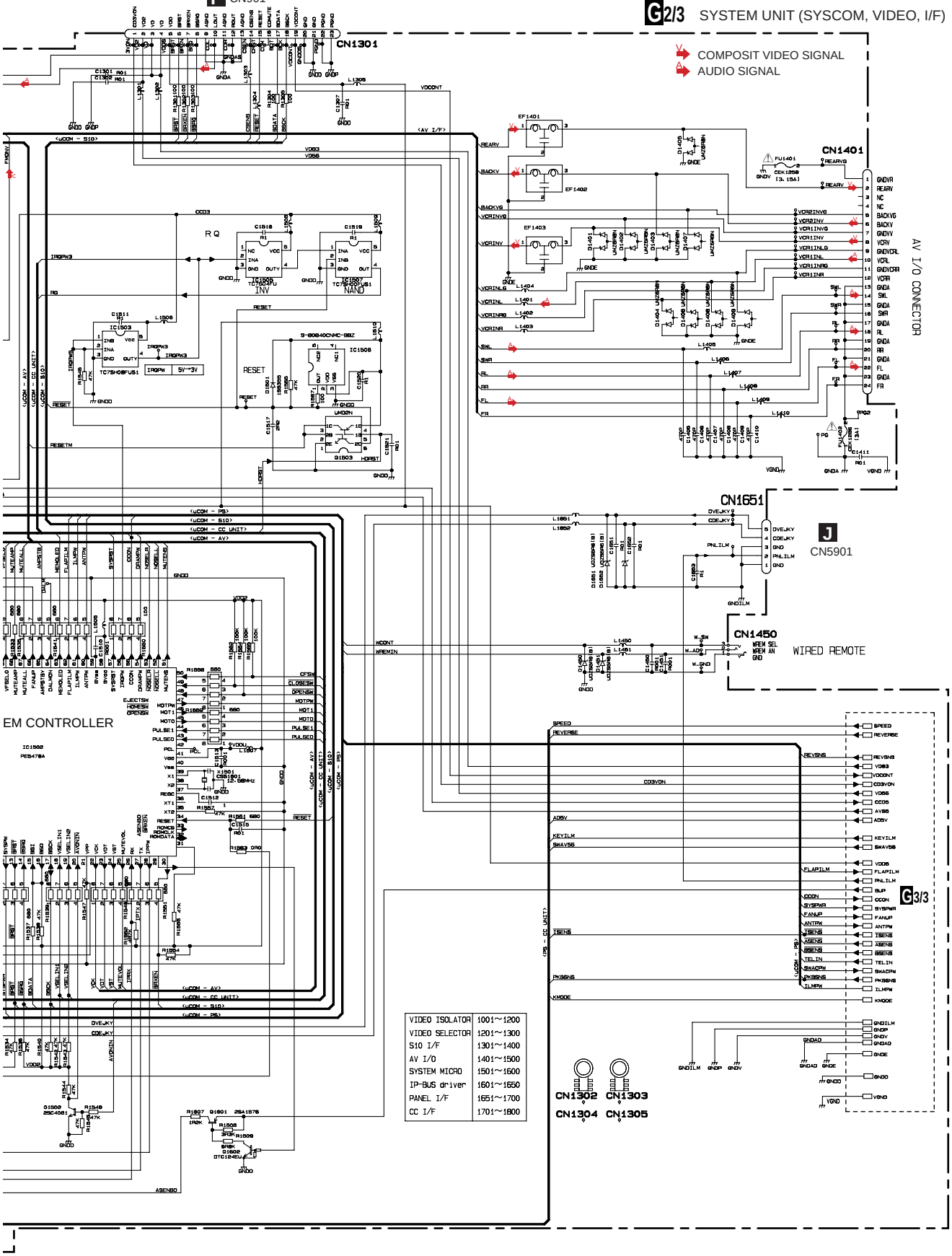

VIDEO ISOLATOR	1001~1200
VIDEO SELECTOR	1201~1300
S10 I/F	1301~1400
AV I/O	1401~1500
SYSTEM MICRO	1501~1600
IP-BUS driver	1601~1650
PANEL I/F	1651~1700
CC I/F	1701~1800

G2/3

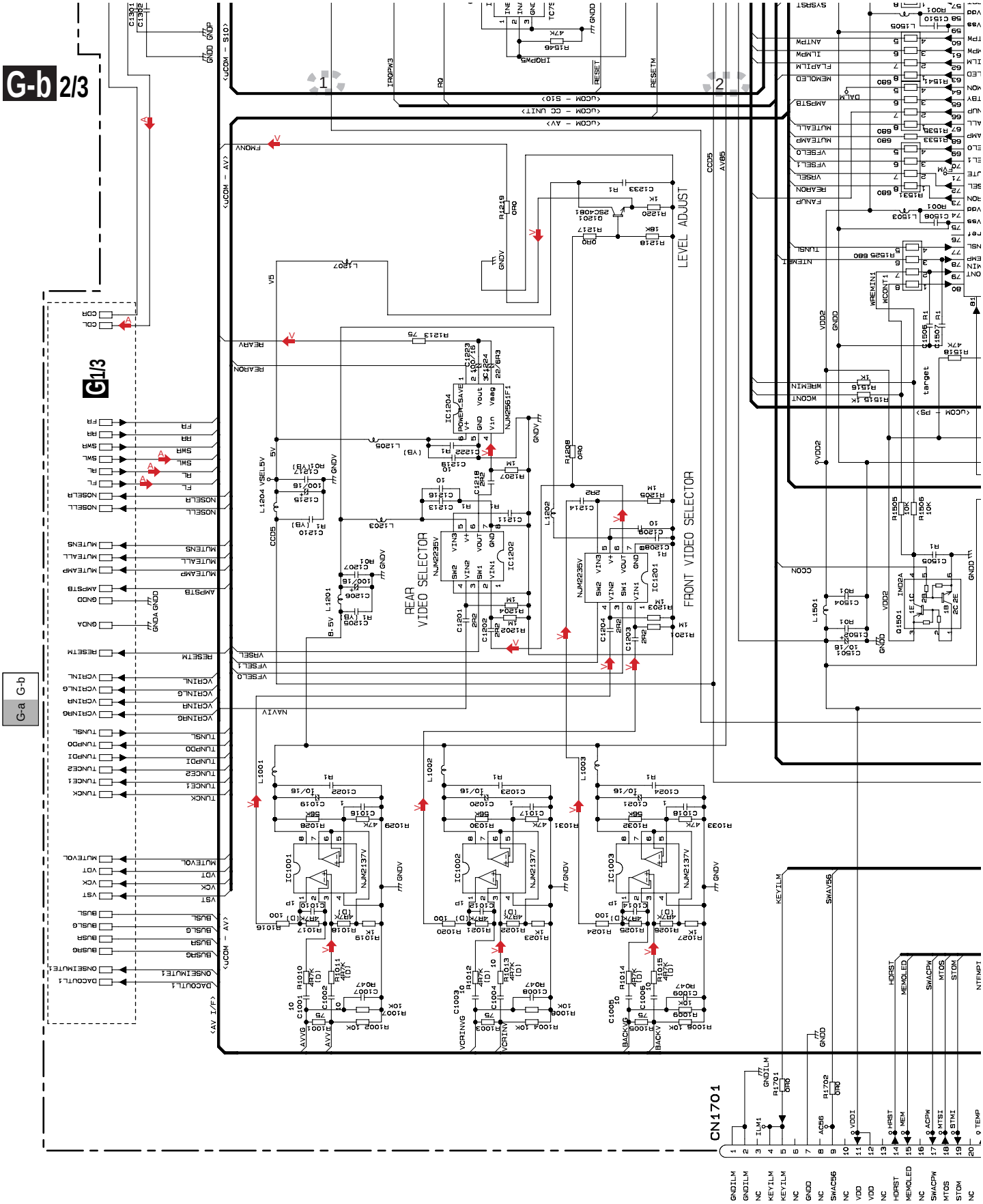
G-b 2/3
G1/3
G-a G-b
REAR VIDEO SELECTOR
FRONT VIDEO SELECTOR
LEVEL ADJUST
CN1701
G-a 2/3

A6/6
CN605

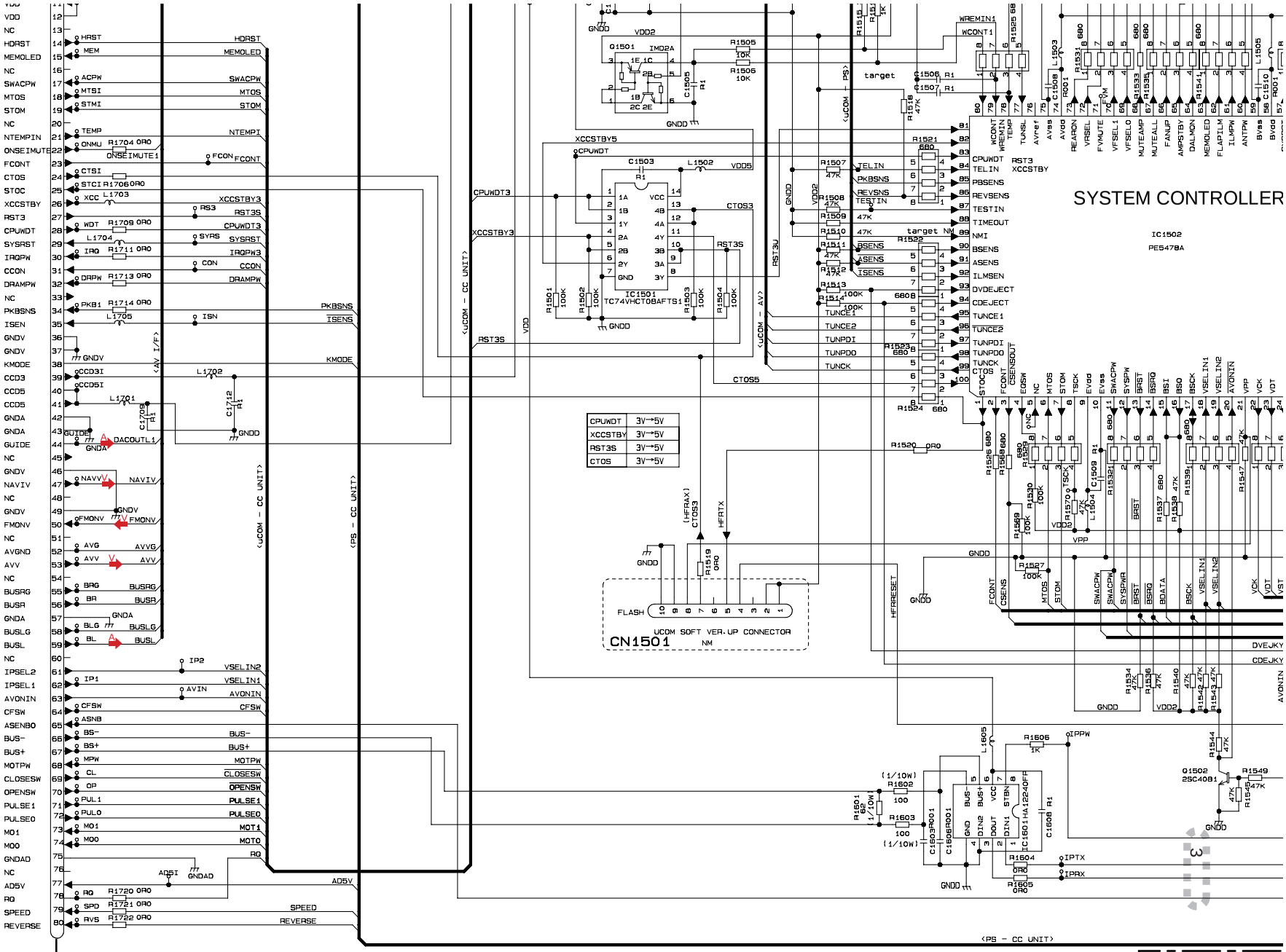
SYSTEM CONTROLLER
IC1502
PE5478A
IC1501
TC74VHCT08AFTS1
Q1501
IMD2A
Q1502
2SC4081
IC1601
HA12240FP
CN1501
UCOM SOFT VER.UP CONNECTOR
NM
FLASH
<UCOM - CC UNIT>
<PS - CC UNIT>
<AV I/F>
<UCOM - PS>
<UCOM - AV>
CPUWDT 3V→5V
XCCSTBY 3V→5V
RST3S 3V→5V
CTOS 3V→5V

G-b 2/3

G-a G-b

G2/3 SYSTEM UNIT (SYSCOM, VIDEO, I/F)

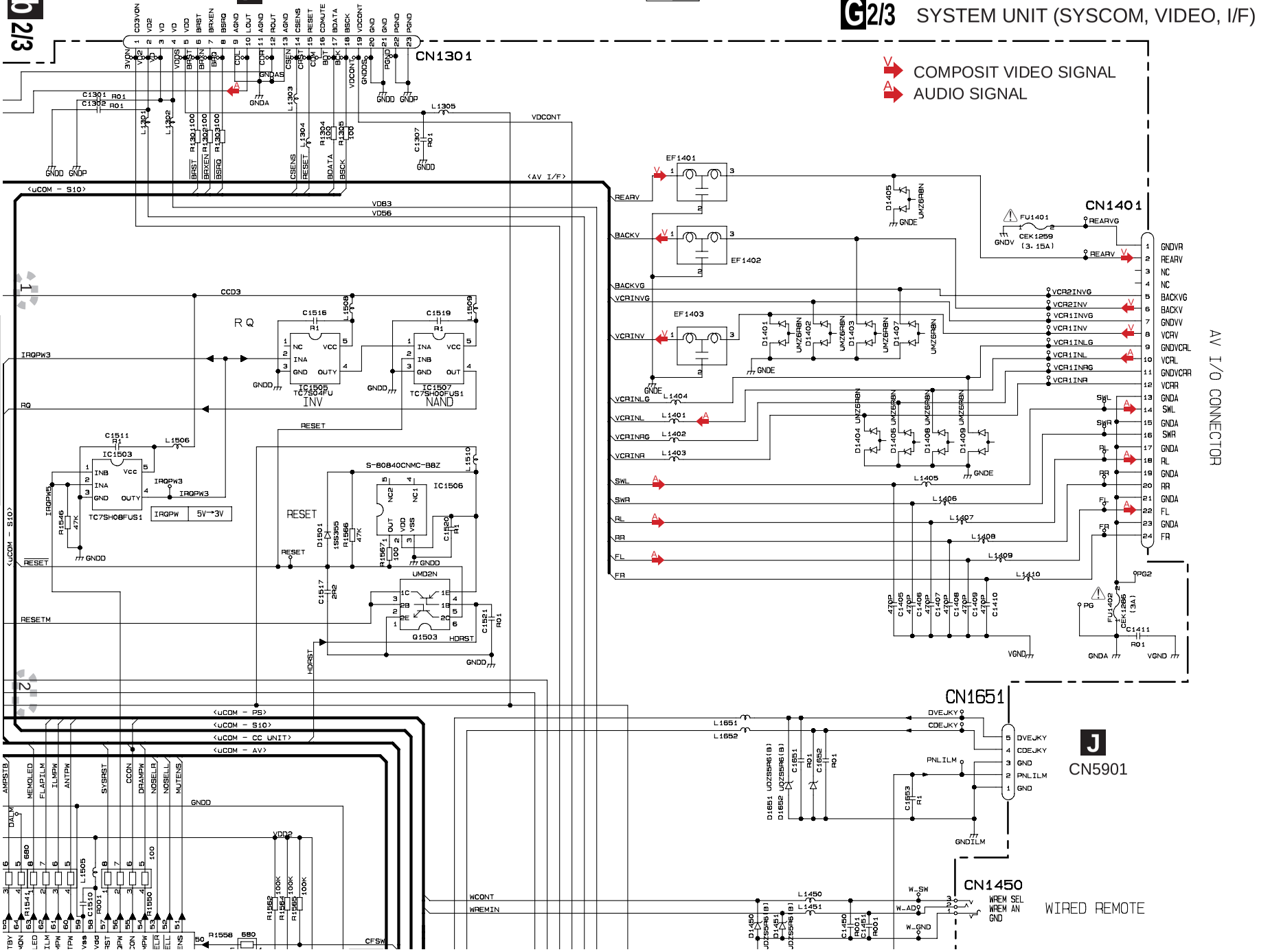

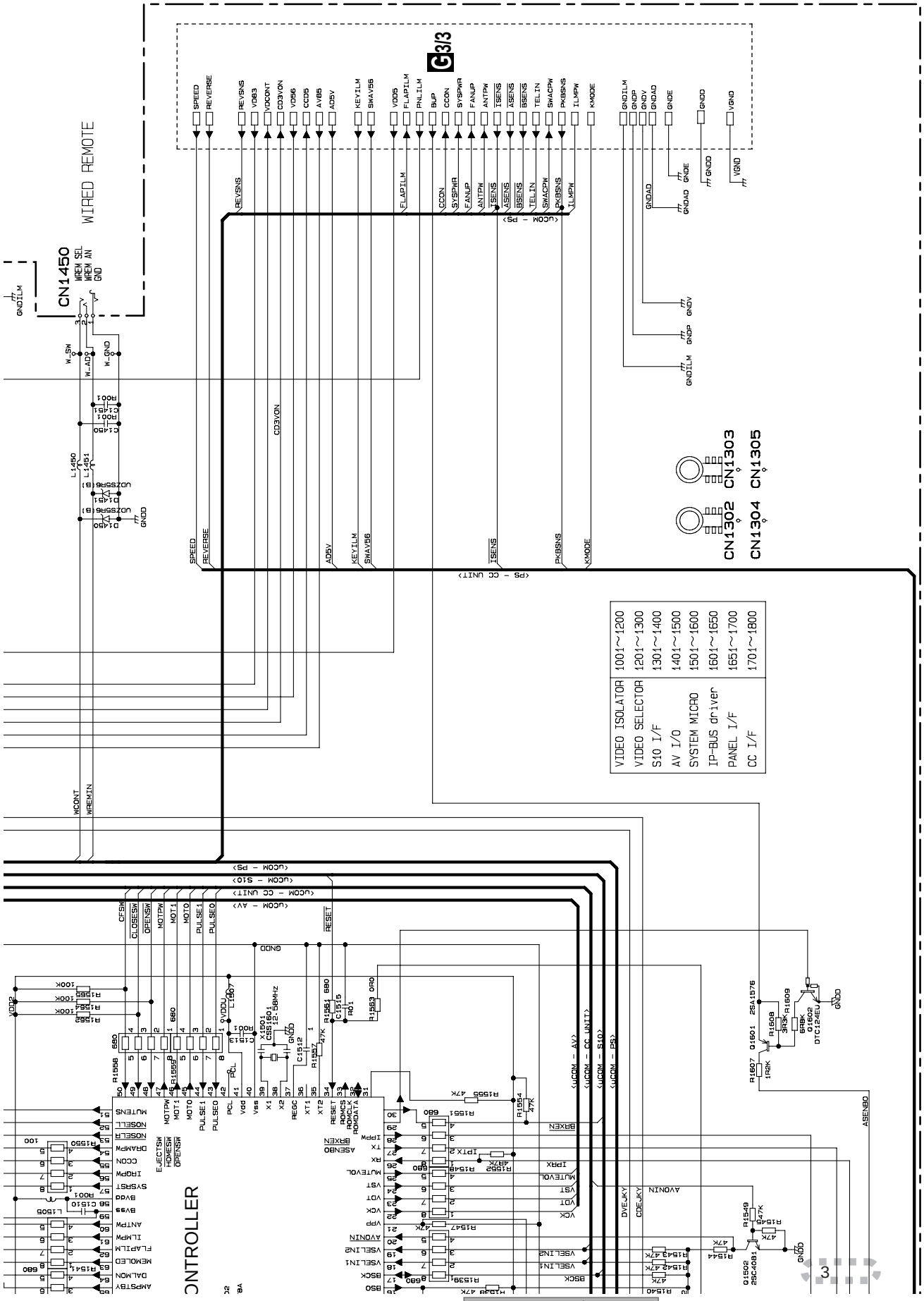
WIRED REMOTE
CN1450
CONTROLLER
CN1302
CN1303
CN1304
CN1305
G3/3
VIDEO ISOLATOR 1001~1200
VIDEO SELECTOR 1201~1300
S10 I/F 1301~1400
AV I/O 1401~1500
SYSTEM MICRO 1501~1600
IP-BUS driver 1601~1650
PANEL I/F 1651~1700
CC I/F 1701~1800

G-a G-b

G-b 2/3

3.16 SYSTEM UNIT (P/S)

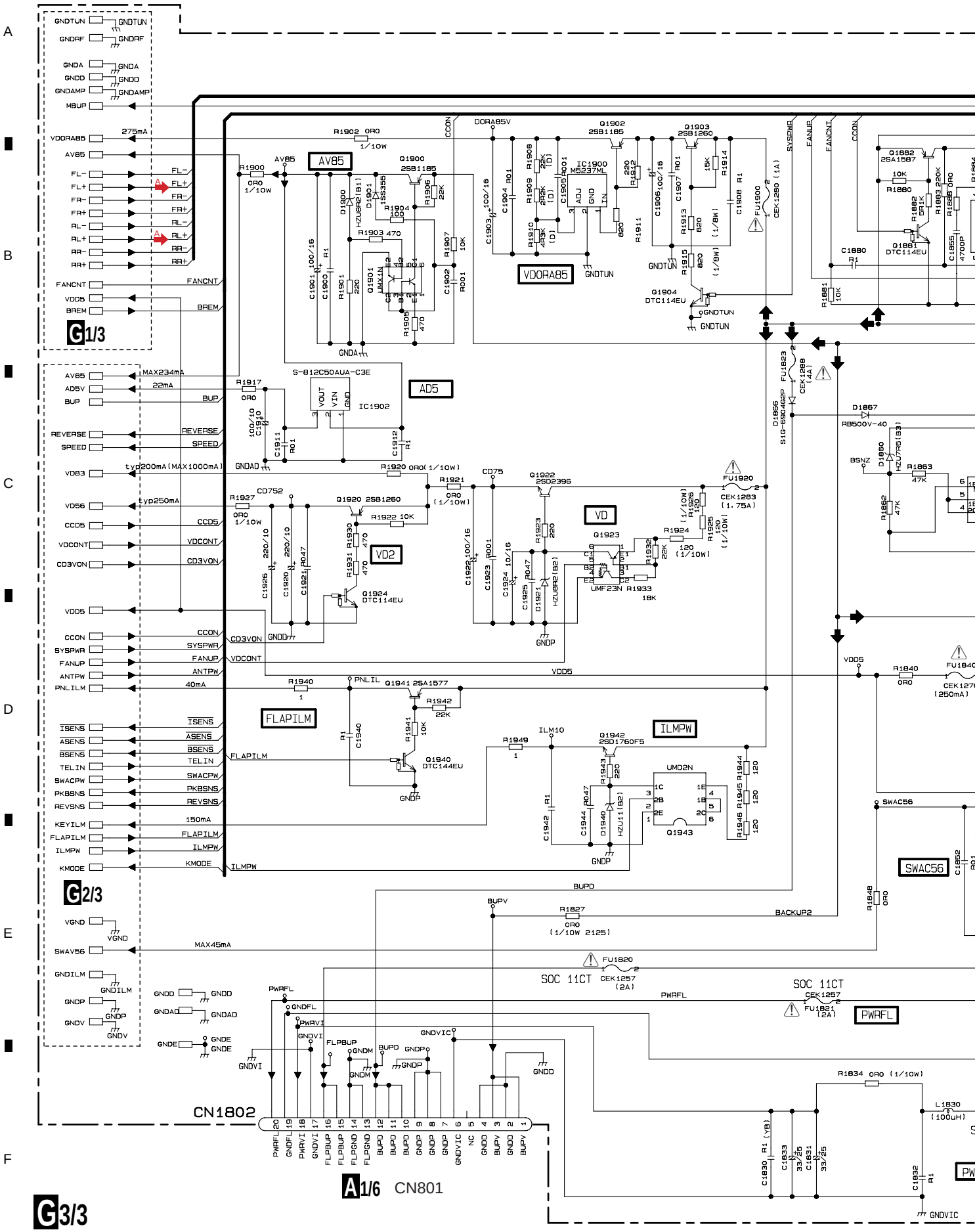

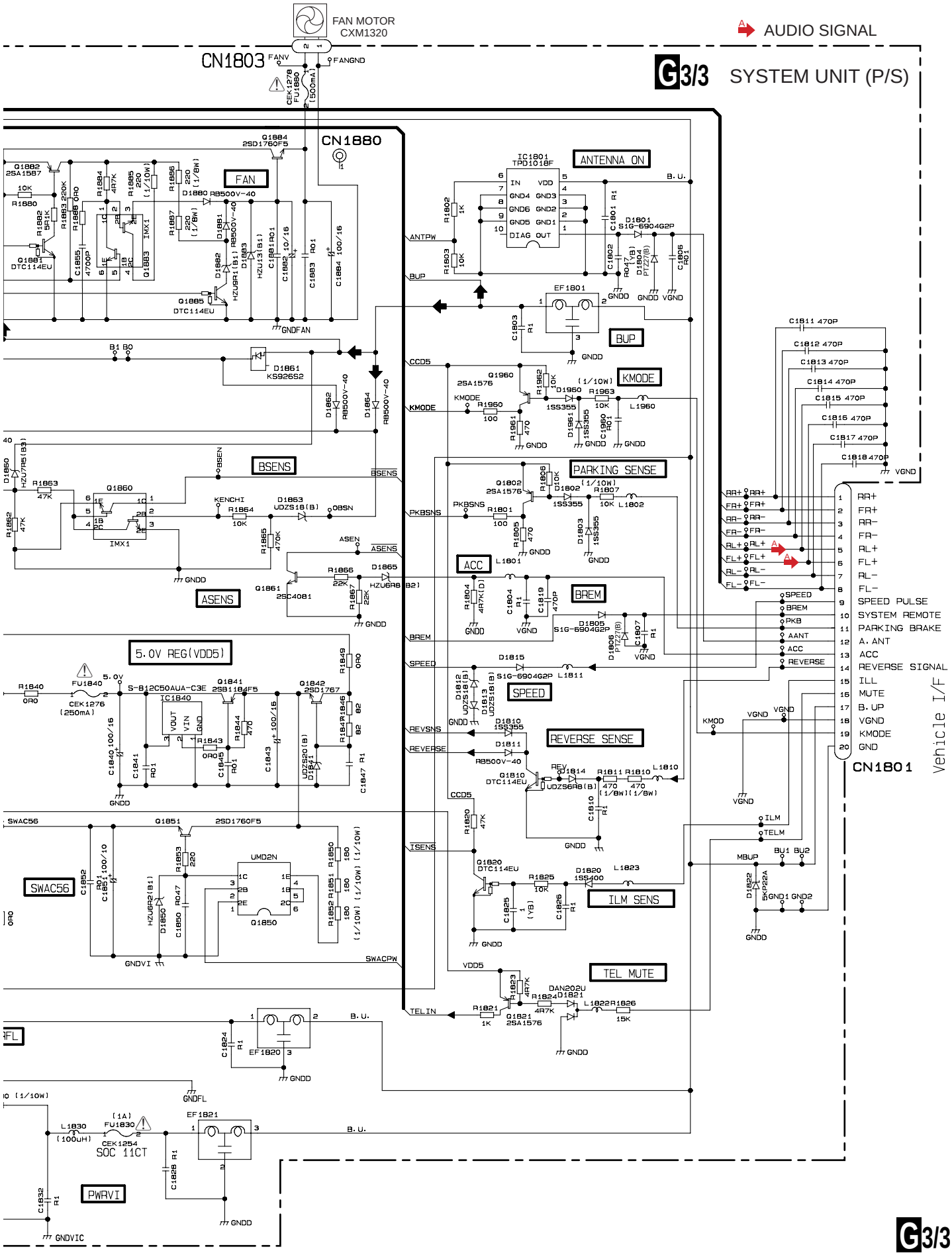
FAN MOTOR
CXM1320
CN1803
AUDIO SIGNAL
G3/3 SYSTEM UNIT (P/S)
CN1880
FAN
ANTENNA ON
BUP
KMODE
BSENS
PARKING SENSE
ACC
BREM
ASENS
5.0V REG(VDD5)
SPEED
REVERSE SENSE
SWAC56
ILM SENS
TEL MUTE
PWRVI
CN1801
Vehicle I/F
RR+
FR+
RR−
FR−
RL+
FL+
RL−
FL−
SPEED PULSE
SYSTEM REMOTE
PARKING BRAKE
A. ANT
ACC
REVERSE SIGNAL
ILL
MUTE
B. UP
VGND
KMODE
GND

3.17 MONITOR PCB (GUIDE PAGE)

H-a

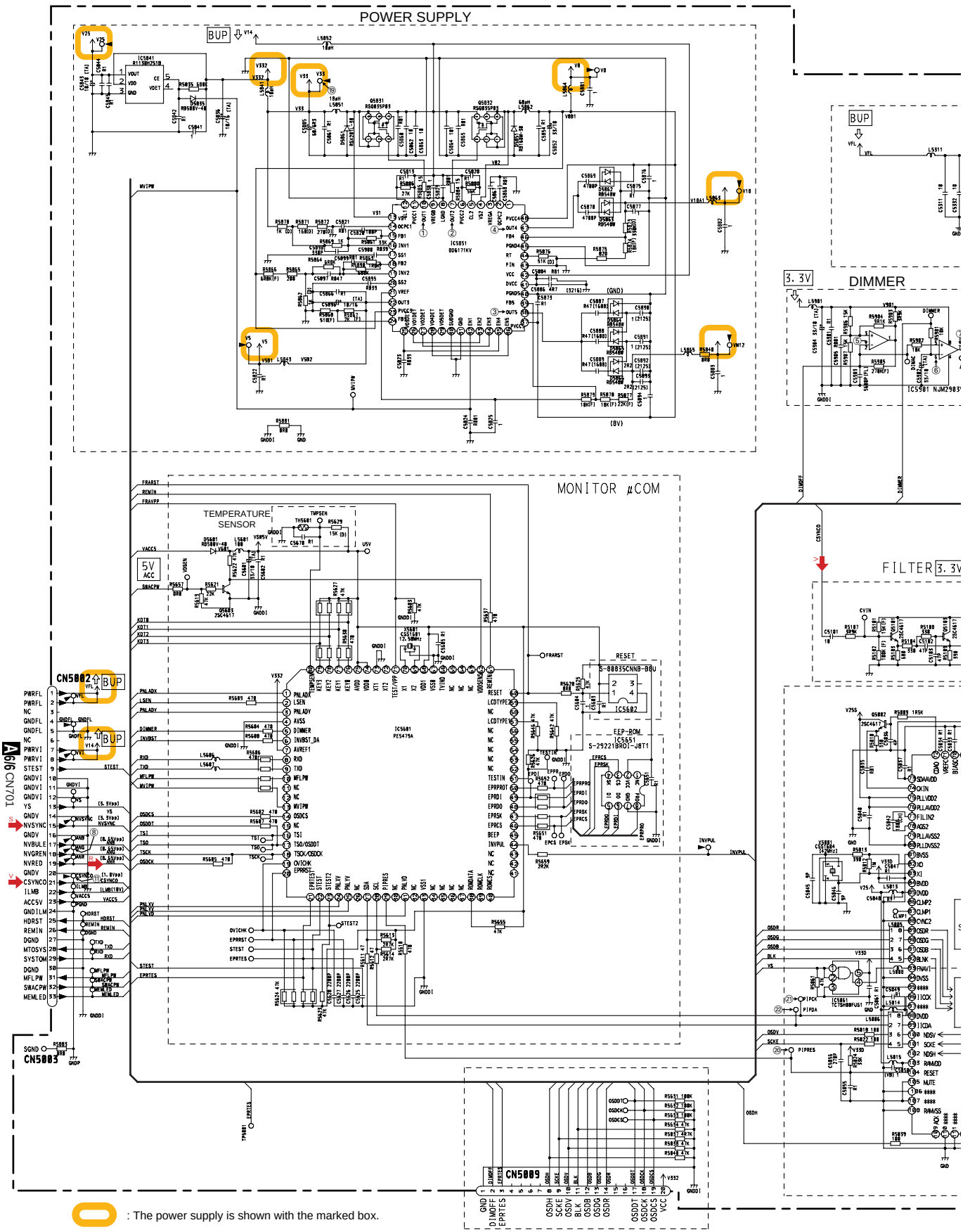

: The power supply is shown with the marked box.

Monitor Adjustment PCB(GGF1416)

H-b

MONI PANEL UNIT
Consists of
MONITOR PCB
KEYBOARD PCB
PANEL PCB

H MONITOR PCB

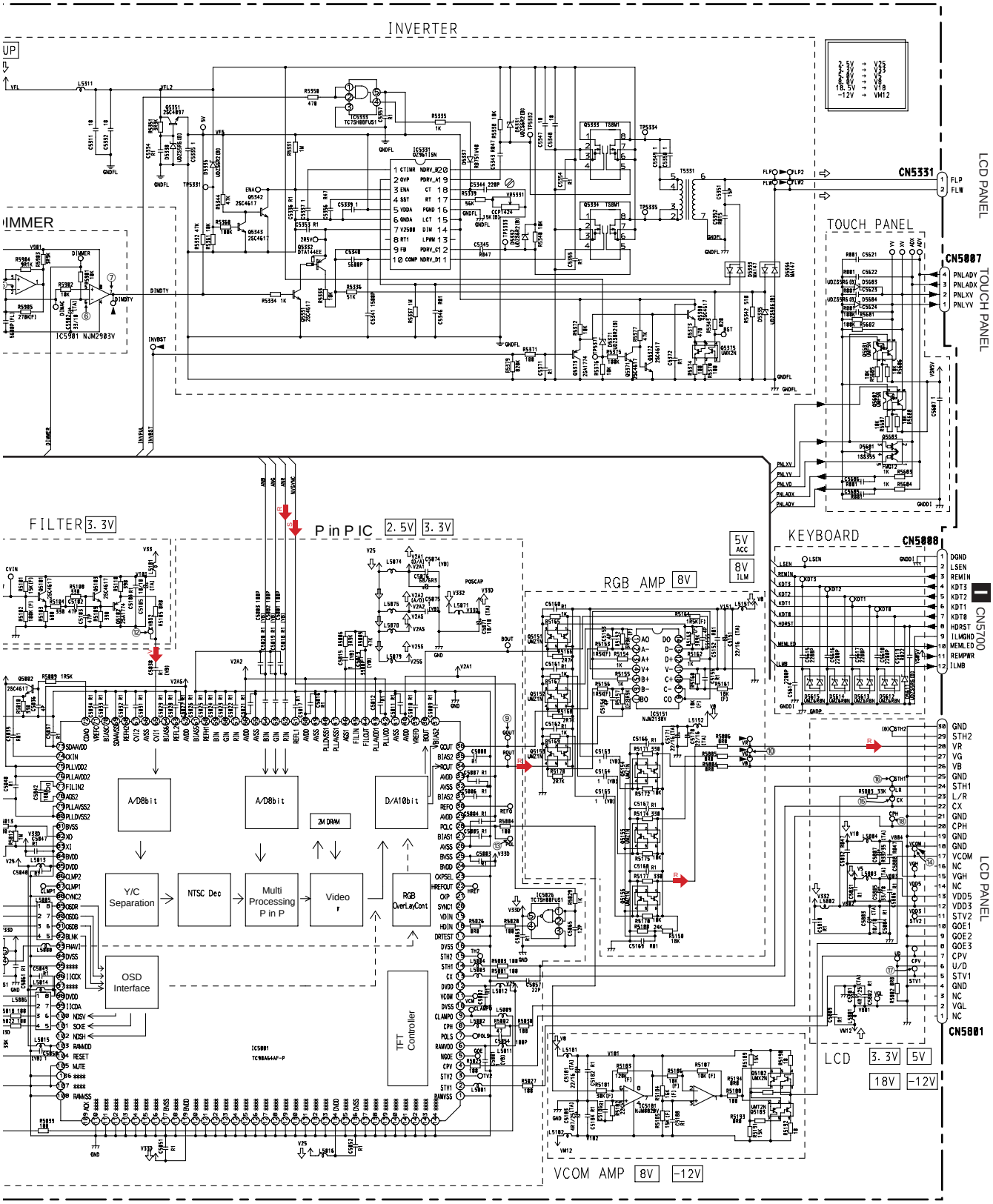

: RGB Signal
: Sync Signal
: Composite Video Signal

H

A

H-b

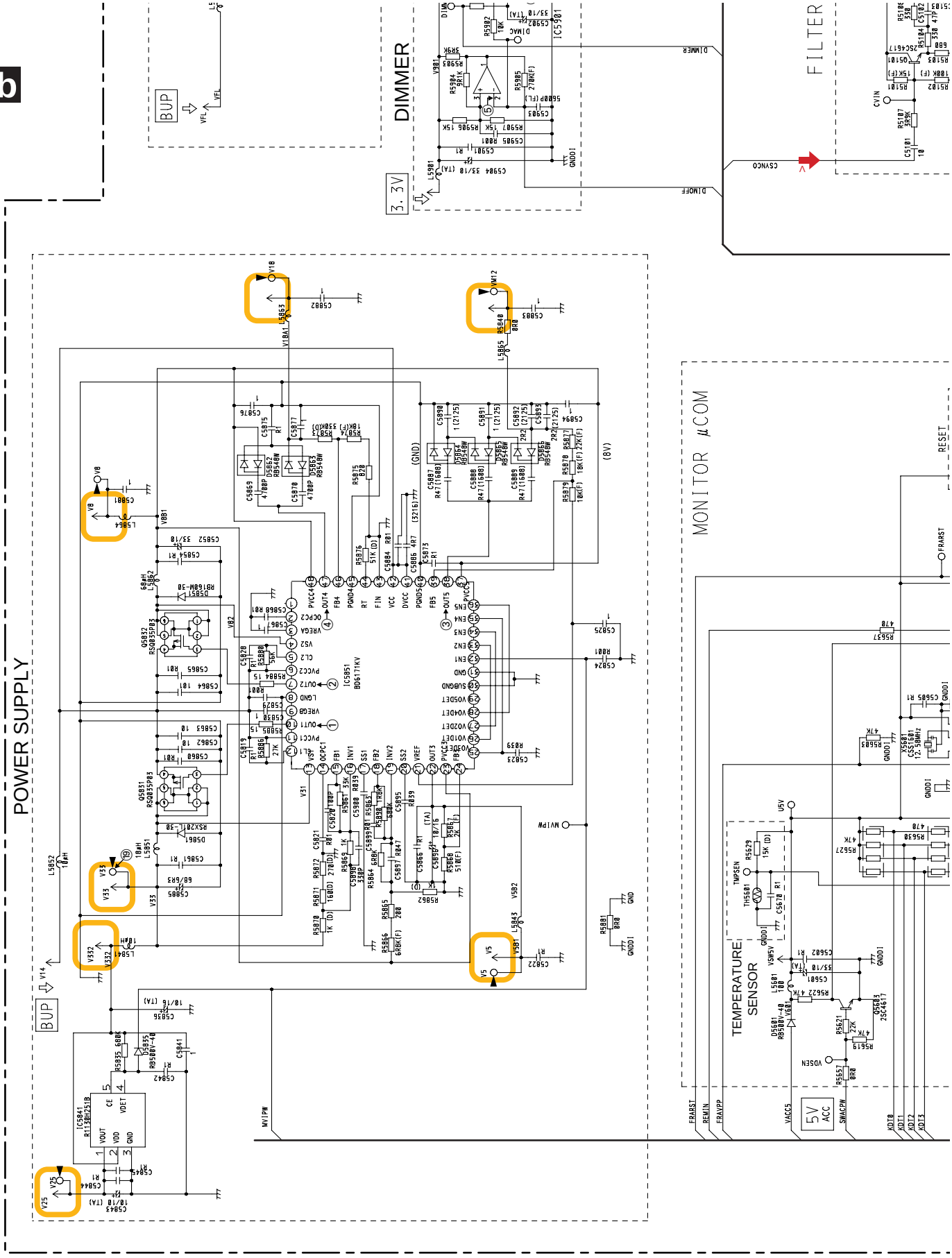
BUP
DIMMER
3.3V
FILTER
POWER SUPPLY
MONITOR µCOM
TEMPERATURE SENSOR
5V ACC
H-a H-b

B

C

D

E

F

H-a

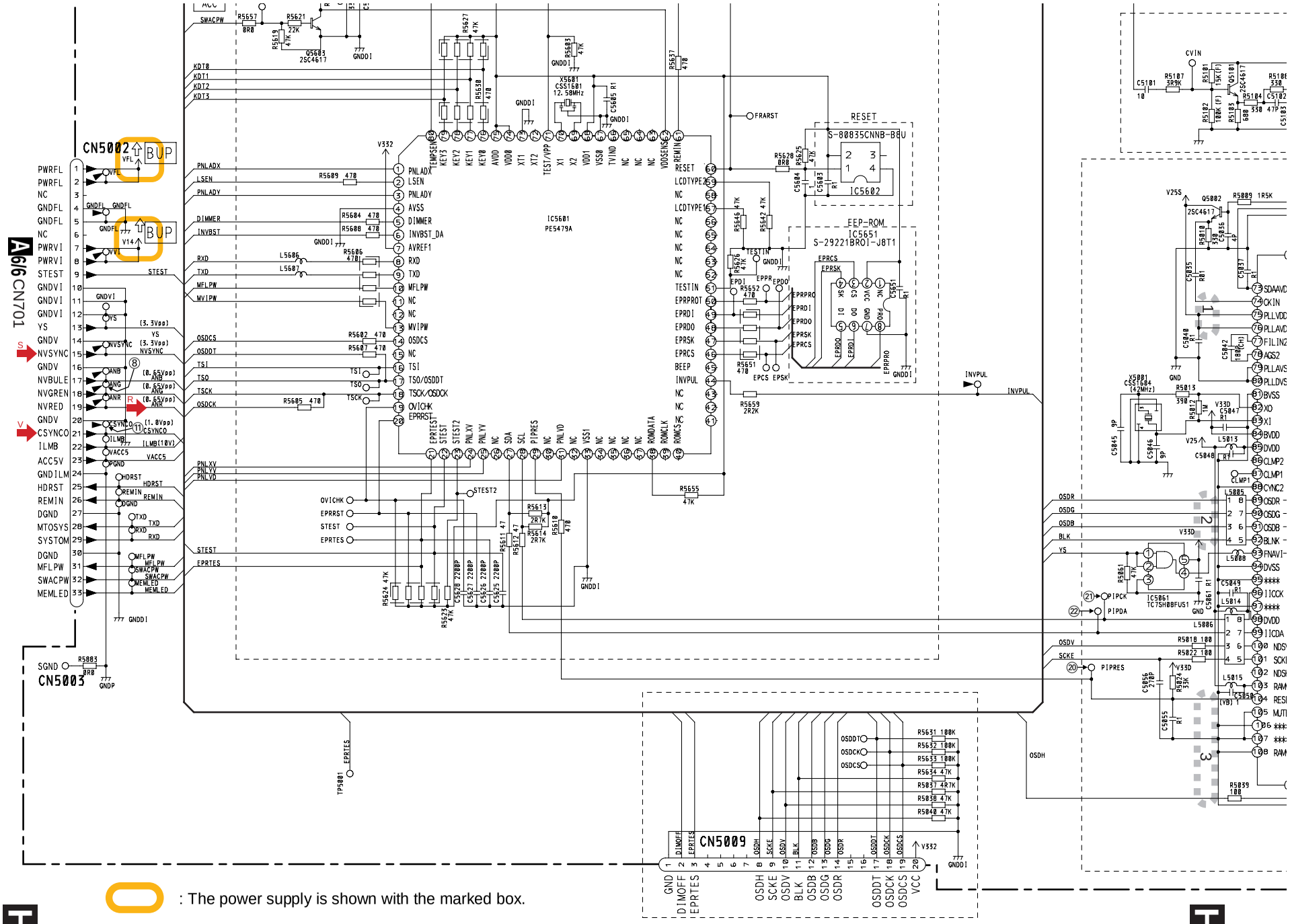

: The power supply is shown with the marked box.

Monitor Adjustment PCB(GGF1416)

H-a H-b

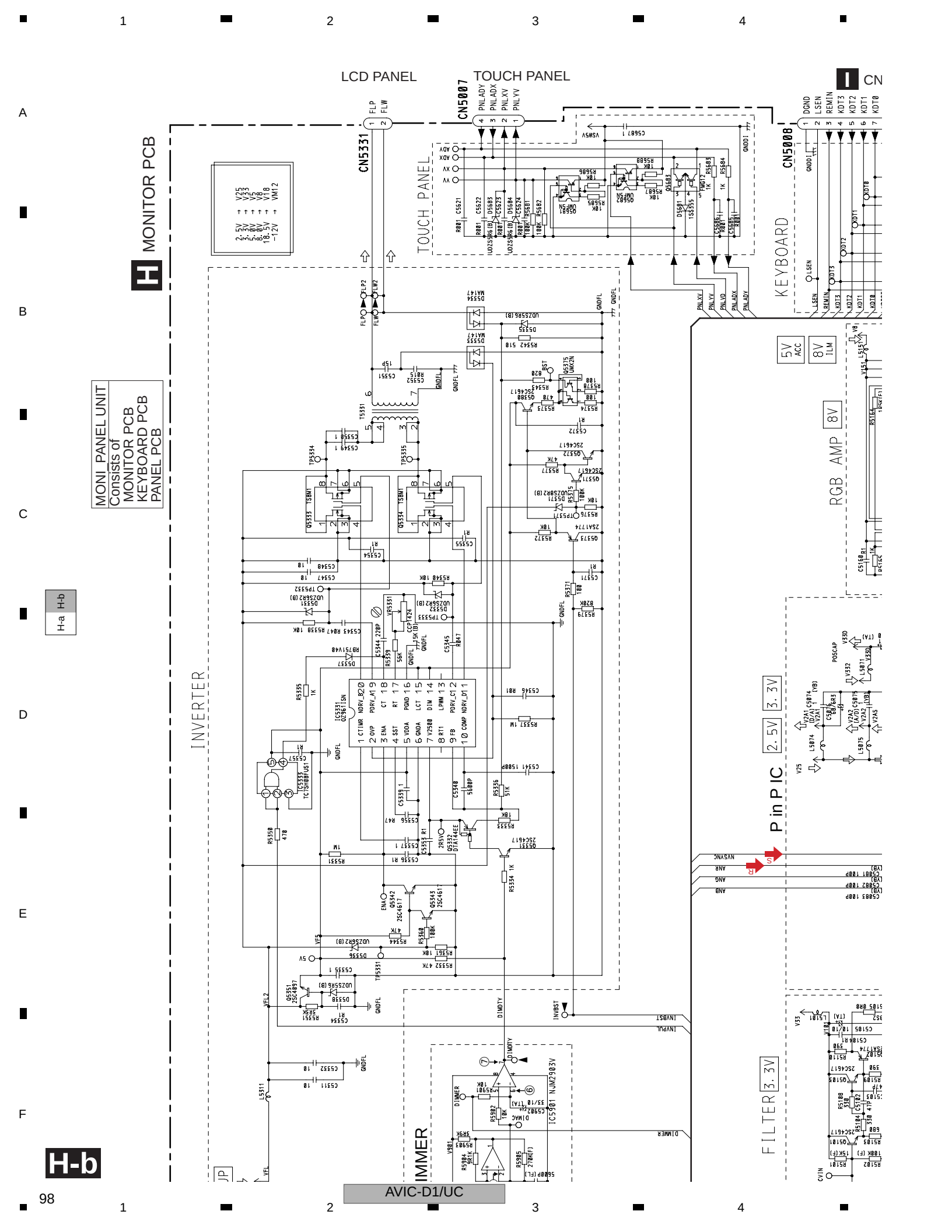
LCD PANEL
TOUCH PANEL
CN5007
CN5331
CN5008
MONITOR PCB
MONI PANEL UNIT
Consists of
MONITOR PCB
KEYBOARD PCB
PANEL PCB
TOUCH PANEL
KEYBOARD
RGB AMP
INVERTER
P in P IC
FILTER
IMMER
5V ACC
8V ILM
8V
3.3V
2.5V
H-a H-b
H-b

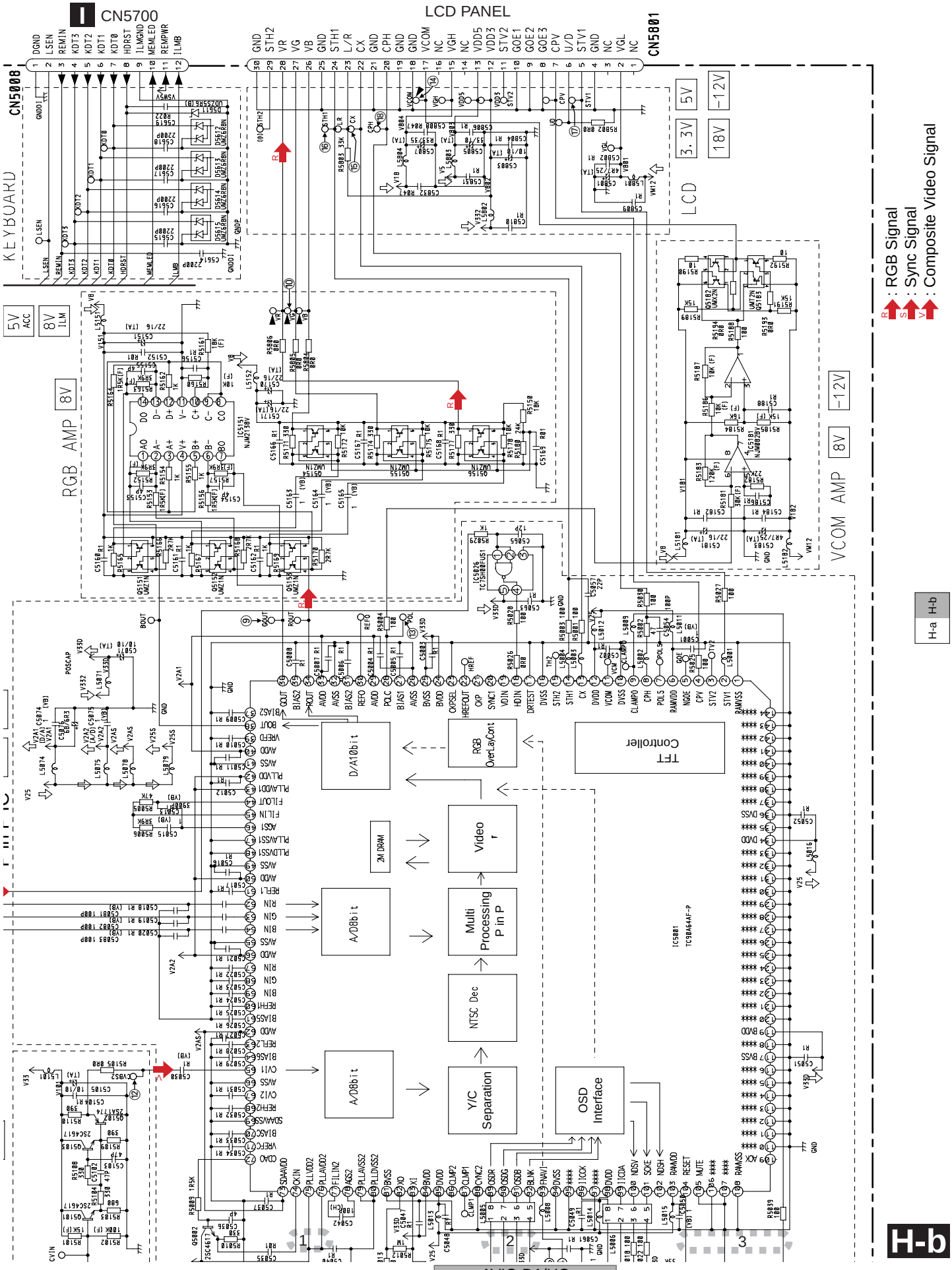

CN5700
LCD PANEL
CN5801
CN5008
KEYBOARD
LCD
RGB AMP
VCOM AMP
TFT Controller
RGB OverLayCont
D/A10bit
Video r
2M DRAM
A/D8bit
Multi Processing P in P
NTSC Dec
Y/C Separation
OSD Interface
IC5001
TC90A64AF-P
: RGB Signal
: Sync Signal
: Composite Video Signal
H-a
H-b

● Waveforms

The encircled number denote measuring pointes in the circuit diagram.

① CH1 : IC5851 Pin 10
② CH2 : IC5851 Pin 7
③ CH3 : IC5851 Pin 38
④ CH4 : IC5851 Pin 47

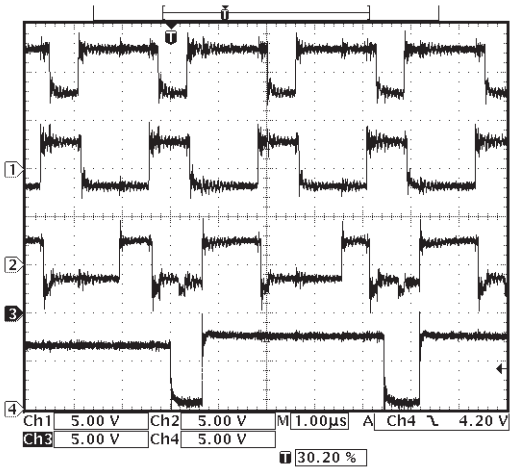

⑪ CH1 : CSYNC0
⑫ CH2 : CVBS2
⑨ CH3 : GOUT
⑩ CH4 : VG

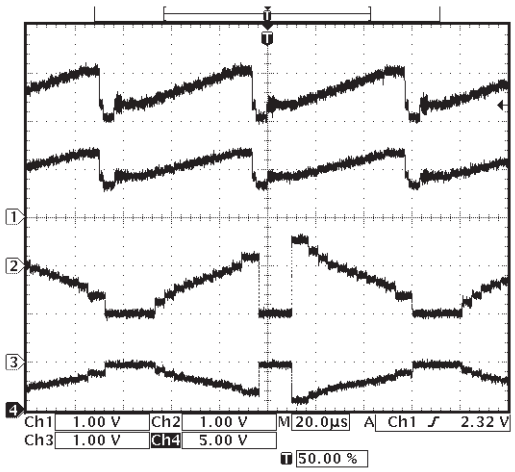

⑤ CH1 : IC5901 Pin 2
⑥ CH2 : IC5901 Pin 6
⑦ CH3 : IC5901 Pin 7

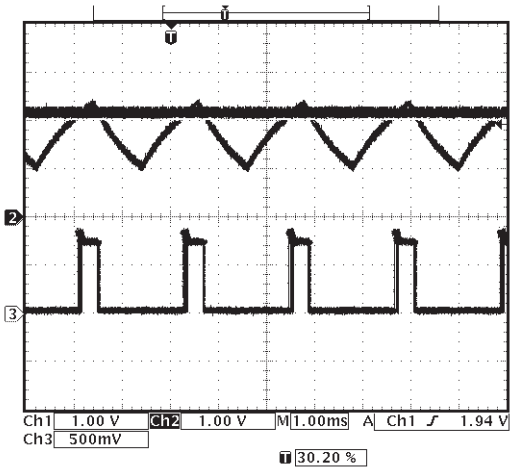

⑪ CH1 : CSYNC0
⑬ CH2 : POL
⑭ CH3 : VCOM
⑩ CH4 : VG

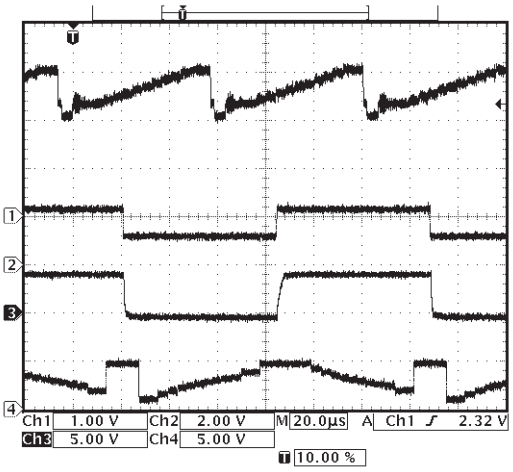

⑧ CH1 : ANG
⑨ CH2 : GOUT
⑩ CH3 : VG

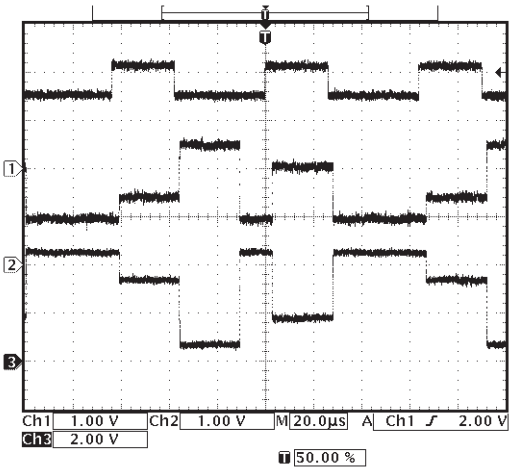

⑪ CH1 : CSYNC0
⑮ CH2 : CX
⑯ CH3 : STH1
⑩ CH4 : VG

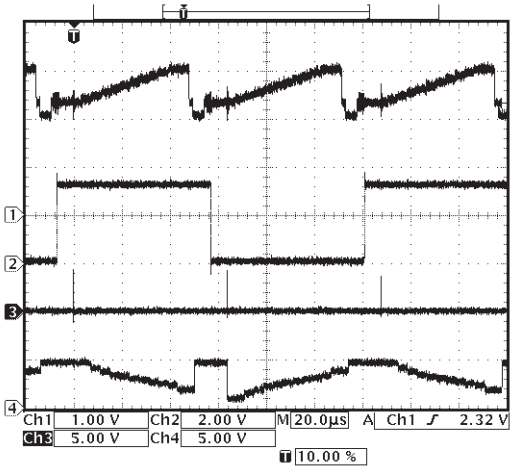

⑪ CH1 : CSYNC0 ⑰ CH3 : STV1
⑮ CH2 : CX ⑩ CH4 : VG

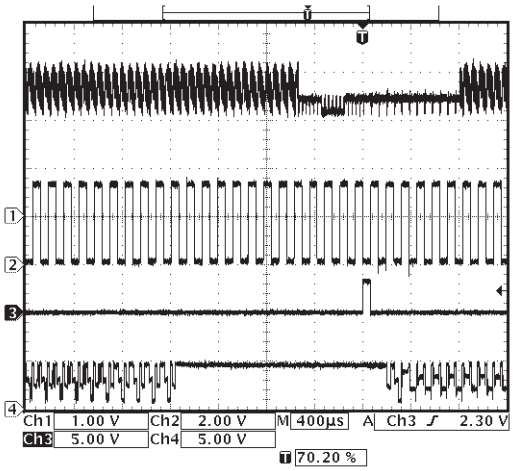

⑲ CH1 : V33 ㉑ CH3 : PIPCK
⑳ CH2 : PIPRES ㉒ CH4 : PIPDA

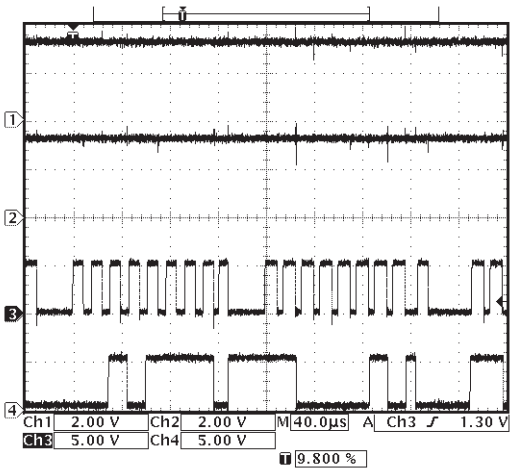

⑪ CH1 : CSYNC0 ⑩ CH3 : VG
⑱ CH2 : CPH

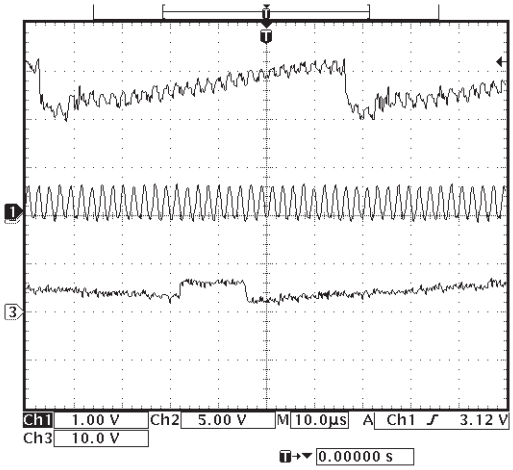

⑲ CH1 : V33 ㉑ CH3 : PIPCK
⑳ CH2 : PIPRES ㉒ CH4 : PIPDA

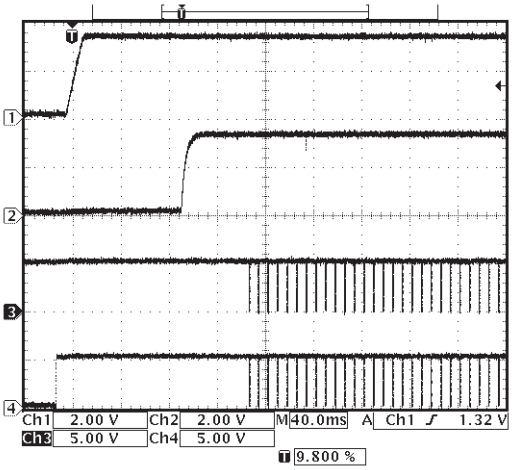

3.18 KEYBOARD PCB

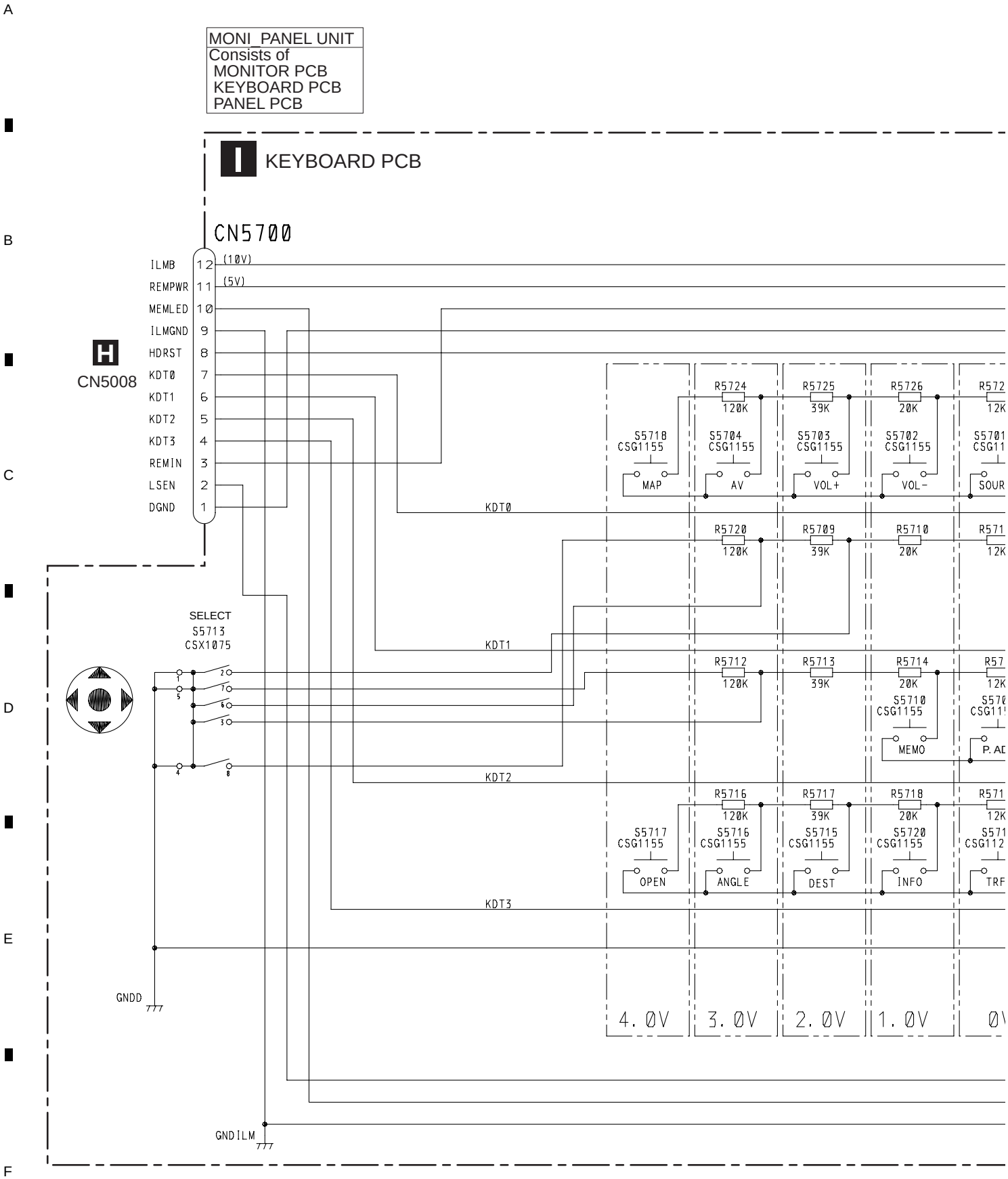

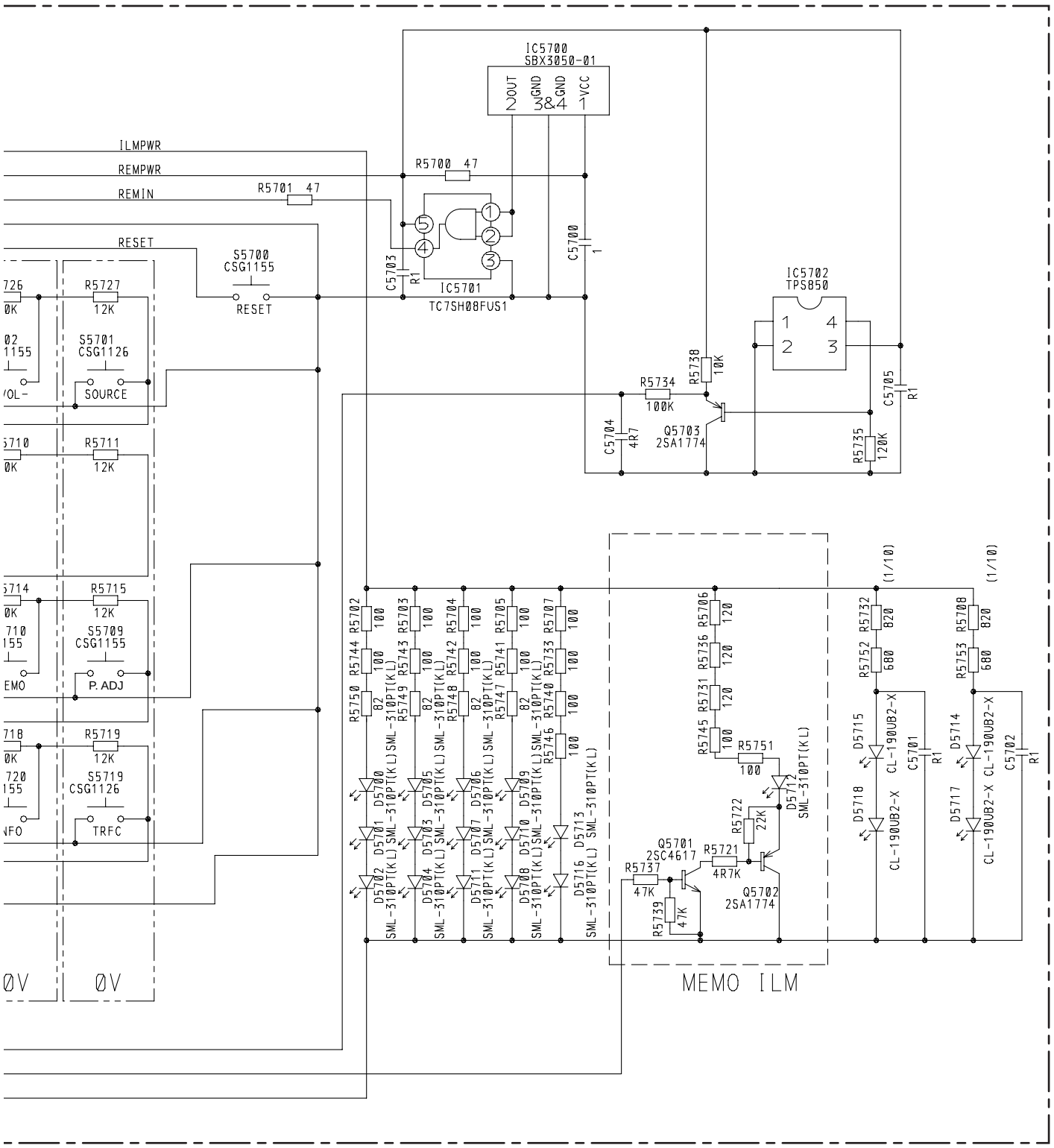
IC5700
SBX3050-01
2 OUT
3&4 GND
1 VCC
ILMPWR
REMPWR
REMIN
RESET
R5700 47
R5701 47
C5700 1
C5703 R1
IC5701
TC7SH08FUS1
S5700
CSG1155
RESET
IC5702
TPS850
R5727 12K
S5701
CSG1126
SOURCE
R5711 12K
R5715 12K
S5709
CSG1155
P. ADJ
R5719 12K
S5719
CSG1126
TRFC
R5738 10K
R5734 100K
Q5703
2SA1774
C5704 4R7
C5705 R1
R5735 120K
R5702 100
R5744 100
R5750 82
R5703 100
R5743 100
R5749 82
R5704 100
R5742 100
R5748 82
R5705 100
R5741 100
R5747 82
R5707 100
R5733 100
R5740 100
R5746 100
D5700 SML-310PT(KL)
D5701 SML-310PT(KL)
D5702 SML-310PT(KL)
D5703 SML-310PT(KL)
D5705 SML-310PT(KL)
D5704 SML-310PT(KL)
D5706 SML-310PT(KL)
D5707 SML-310PT(KL)
D5711 SML-310PT(KL)
D5709 SML-310PT(KL)
D5710 SML-310PT(KL)
D5708 SML-310PT(KL)
D5713 SML-310PT(KL)
D5716 SML-310PT(KL)
R5706 120
R5736 120
R5731 120
R5745 100
R5751 100
D5712 SML-310PT(KL)
R5722 22K
R5721 4R7K
Q5701
2SC4617
R5737 47K
R5739 47K
Q5702
2SA1774
MEMO ILM
(1/10)
R5732 820
R5752 680
D5715 CL-190UB2-X
C5701 R1
D5718 CL-190UB2-X
R5708 820
R5753 680
D5714 CL-190UB2-X
C5702 R1
D5717 CL-190UB2-X
0V
0V

3.19 PANEL PCB

A

B

C

D

E

F

J PANEL PCB

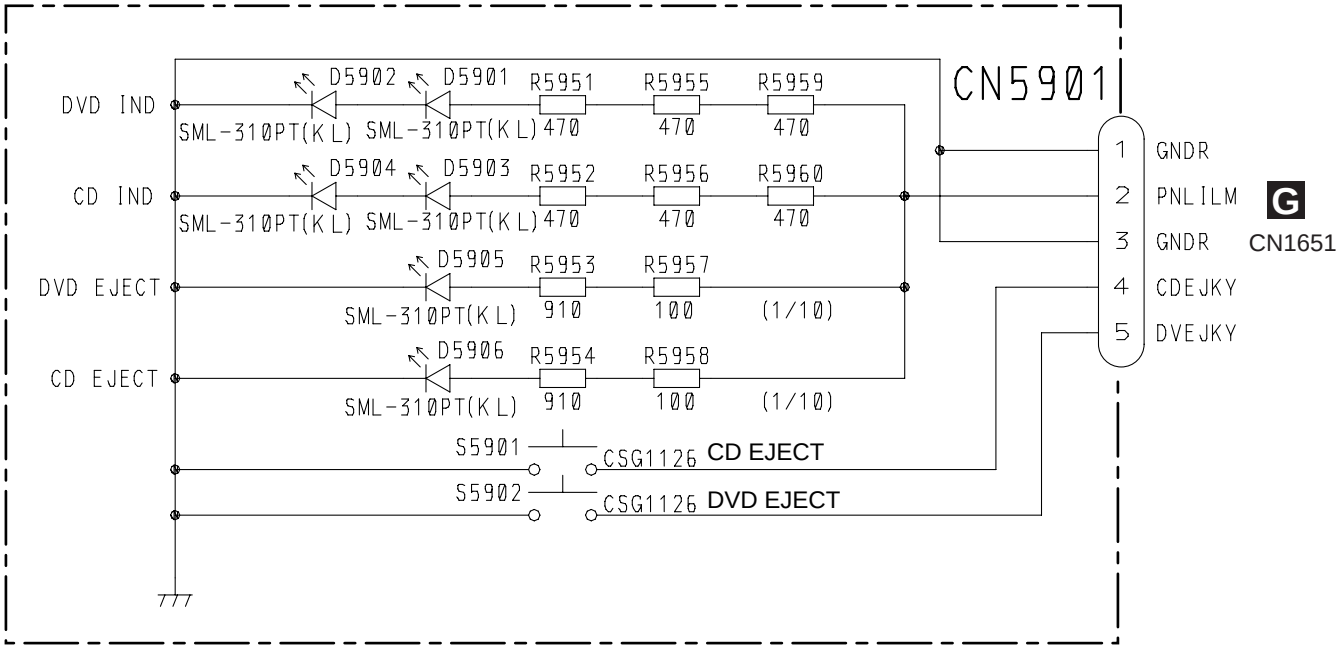

MONI_PANEL UNIT
Consists of MONITOR PCB KEYBOARD PCB PANEL PCB

J

A

B

C

D

E

F

3.20 CONNECTOR UNIT

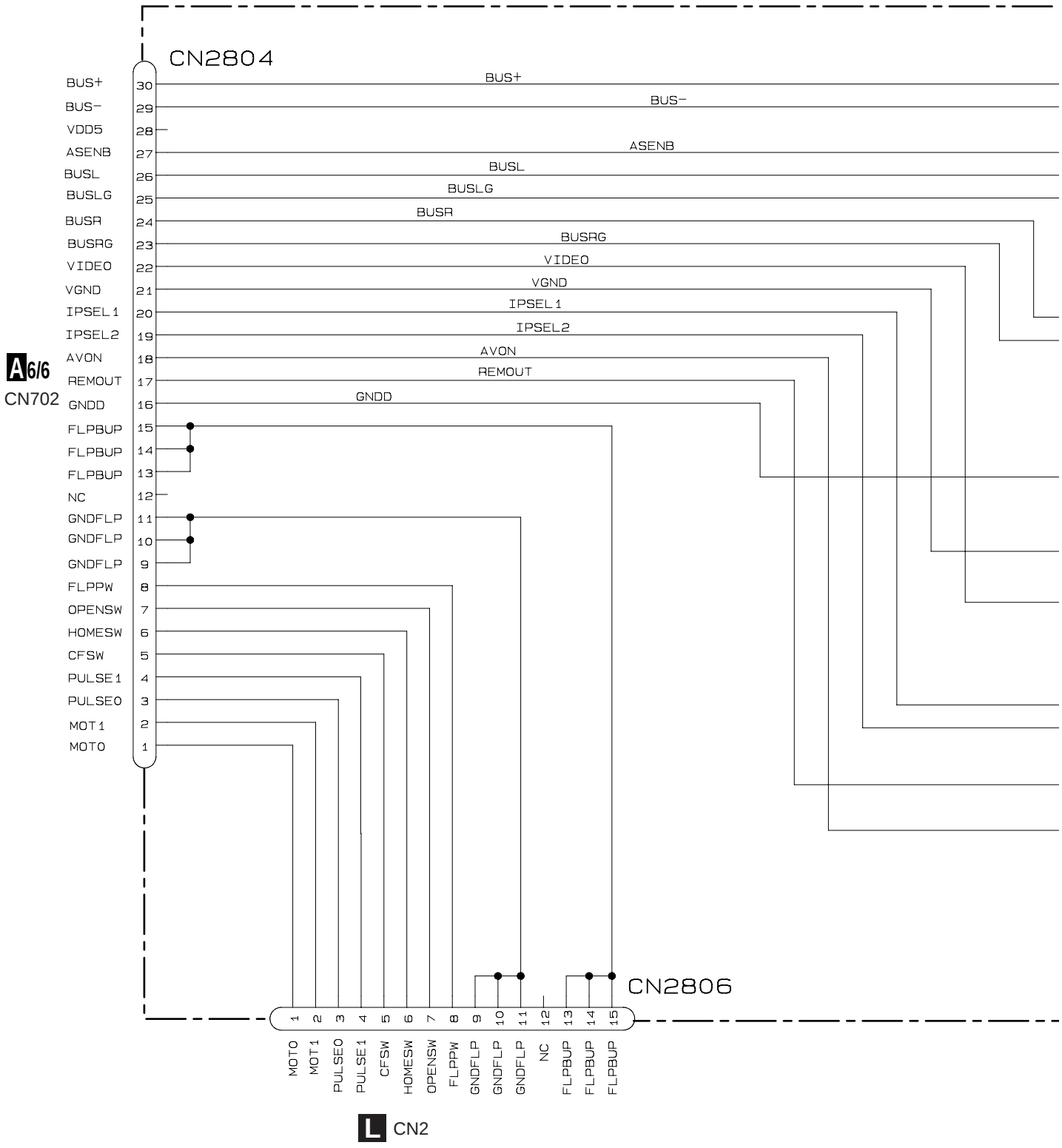

K CONNECTOR UNIT

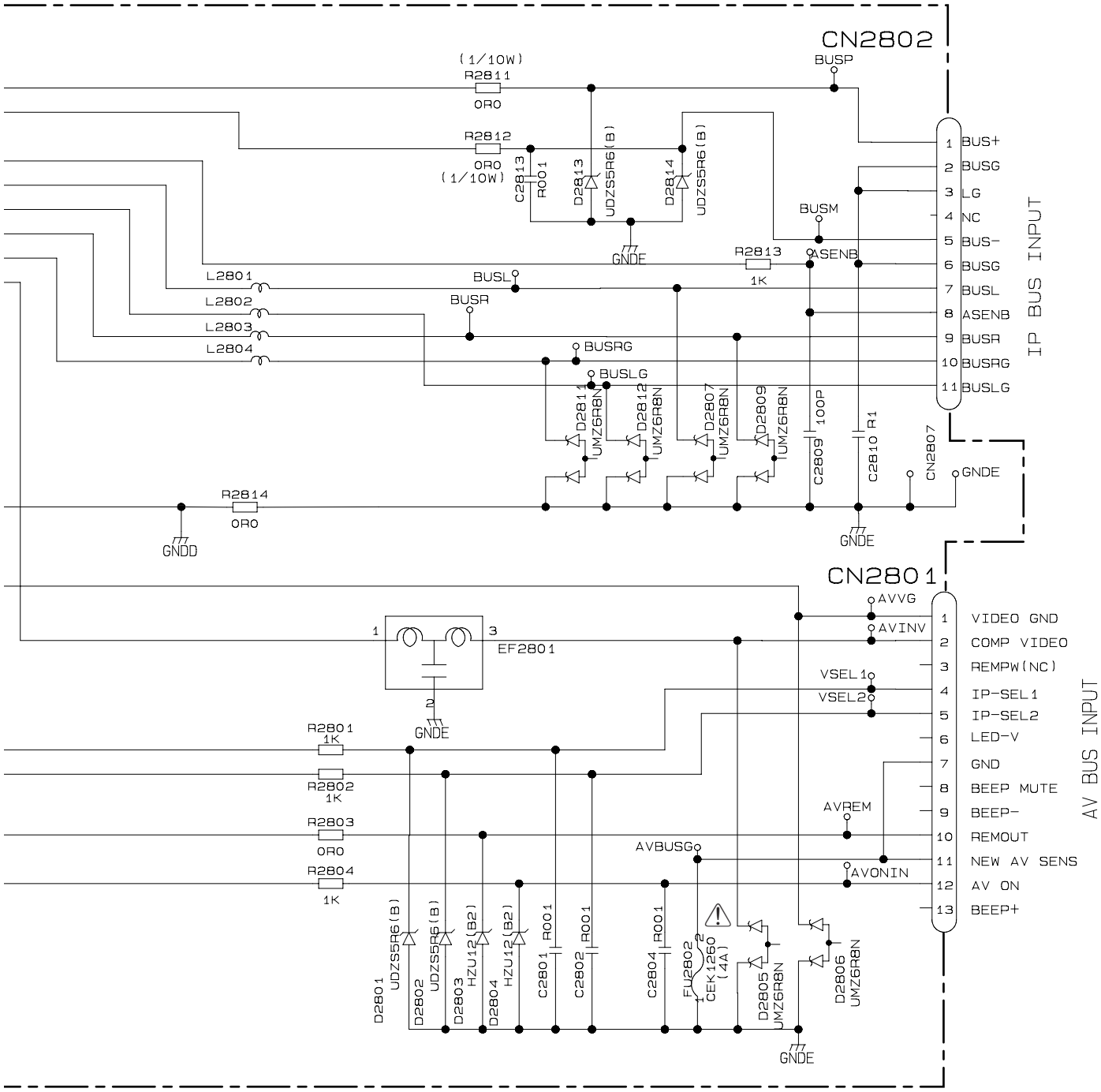

3.21 MAIN PCB UNIT

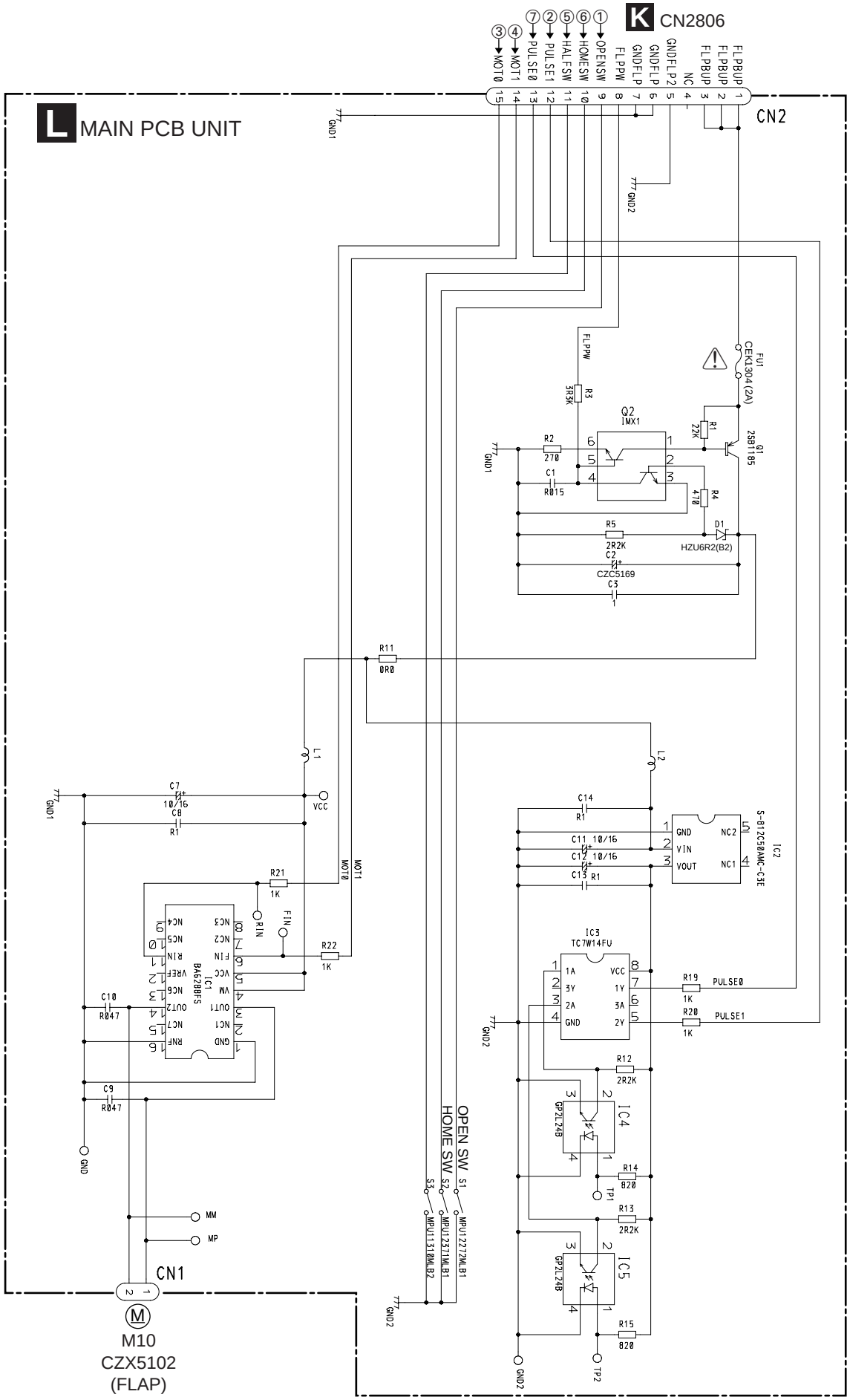

● Waveforms

The encircled number denote measuring pointes in the circuit diagram.

• FULL OPEN

① CH1 : OPENSW ③ CH3 : MOT0
② CH2 : PULSE1 ④ CH4 : MOT1

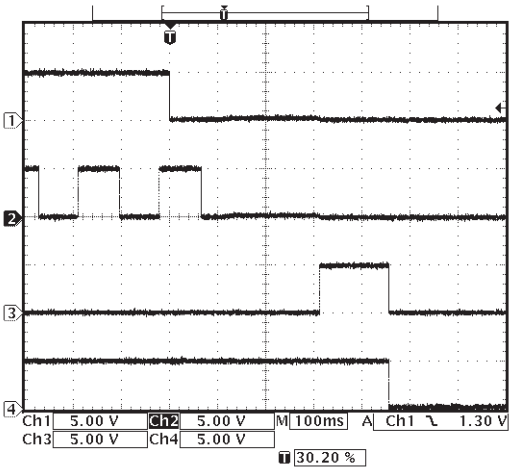

• CLOSE

⑥ CH1 : HOMESW ③ CH3 : MOT0
② CH2 : PULSE1 ④ CH4 : MOT1

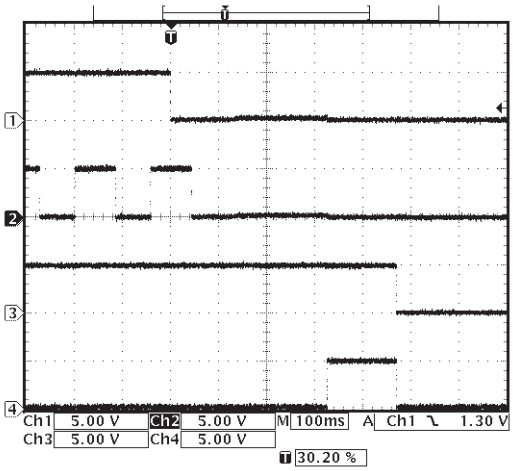

• HALF OPEN

⑤ CH1 : HALFSW ③ CH3 : MOT0
② CH2 : PULSE1 ④ CH4 : MOT1

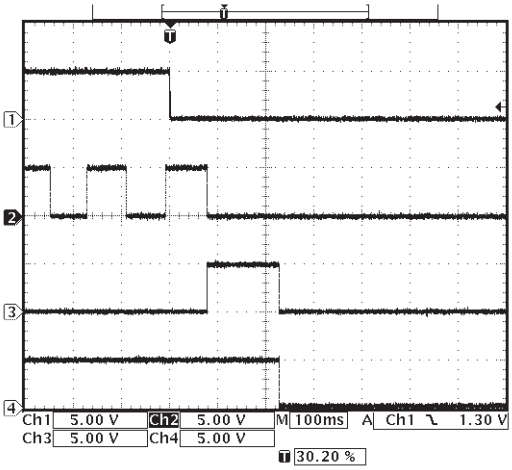

• ANGLE

⑦ CH1 : PULSE0 ③ CH3 : MOT0
② CH2 : PULSE1 ④ CH4 : MOT1

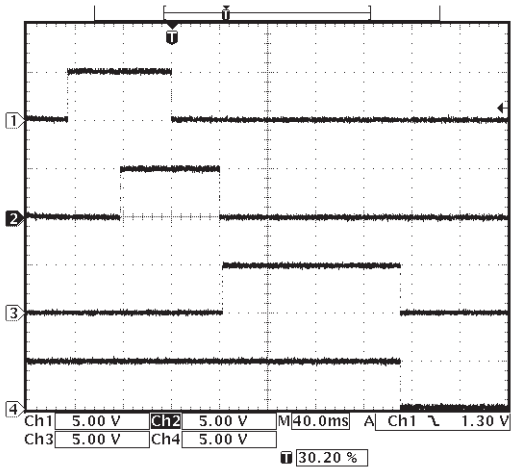

4. PCB CONNECTION DIAGRAM
4.1 CC UNIT

NOTE FOR PCB DIAGRAMS

1. The parts mounted on this PCB include all necessary parts for several destination.
   For further information for respective destinations, be sure to check with the schematic diagram.
2. Viewpoint of PCB diagrams

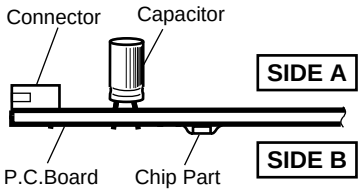

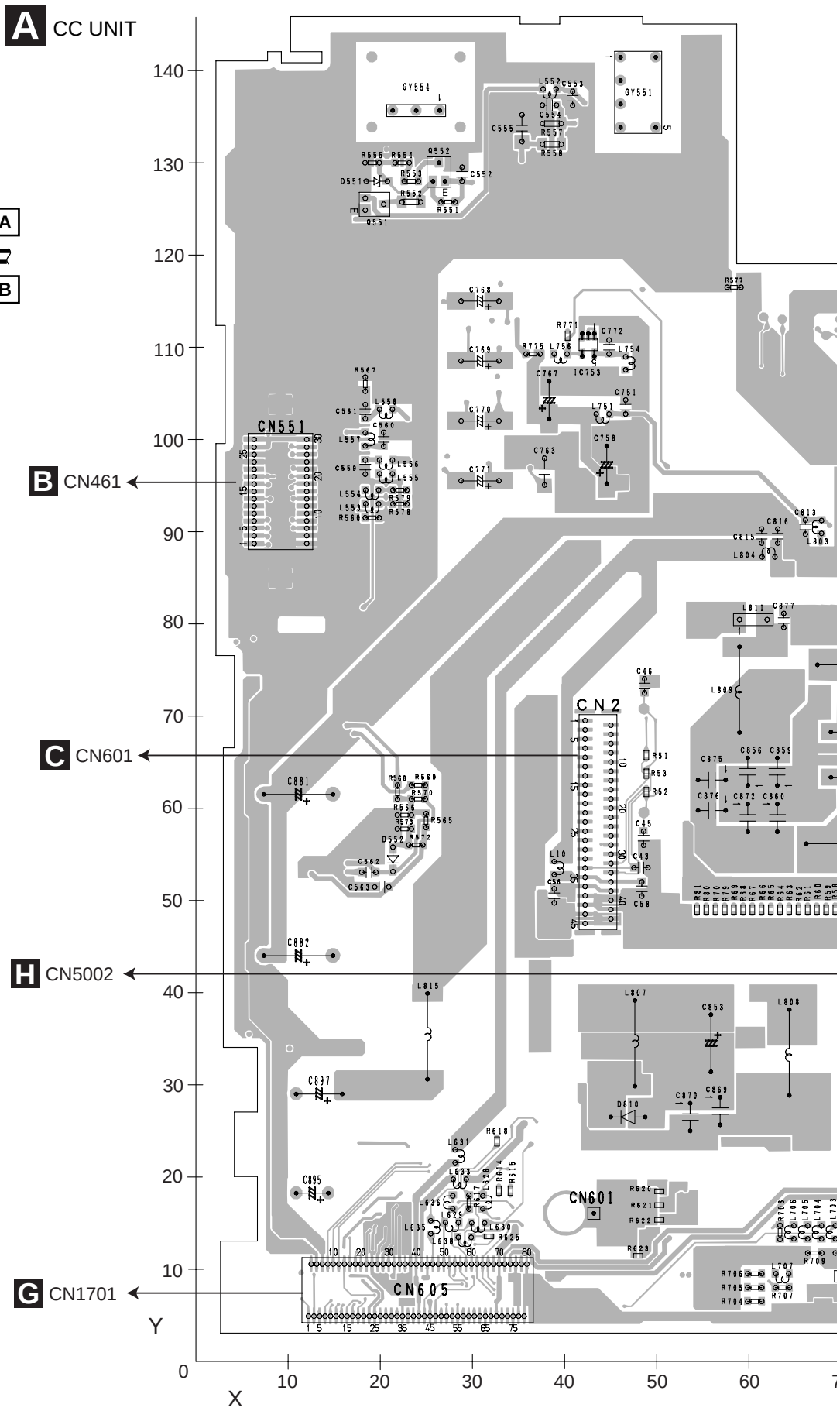

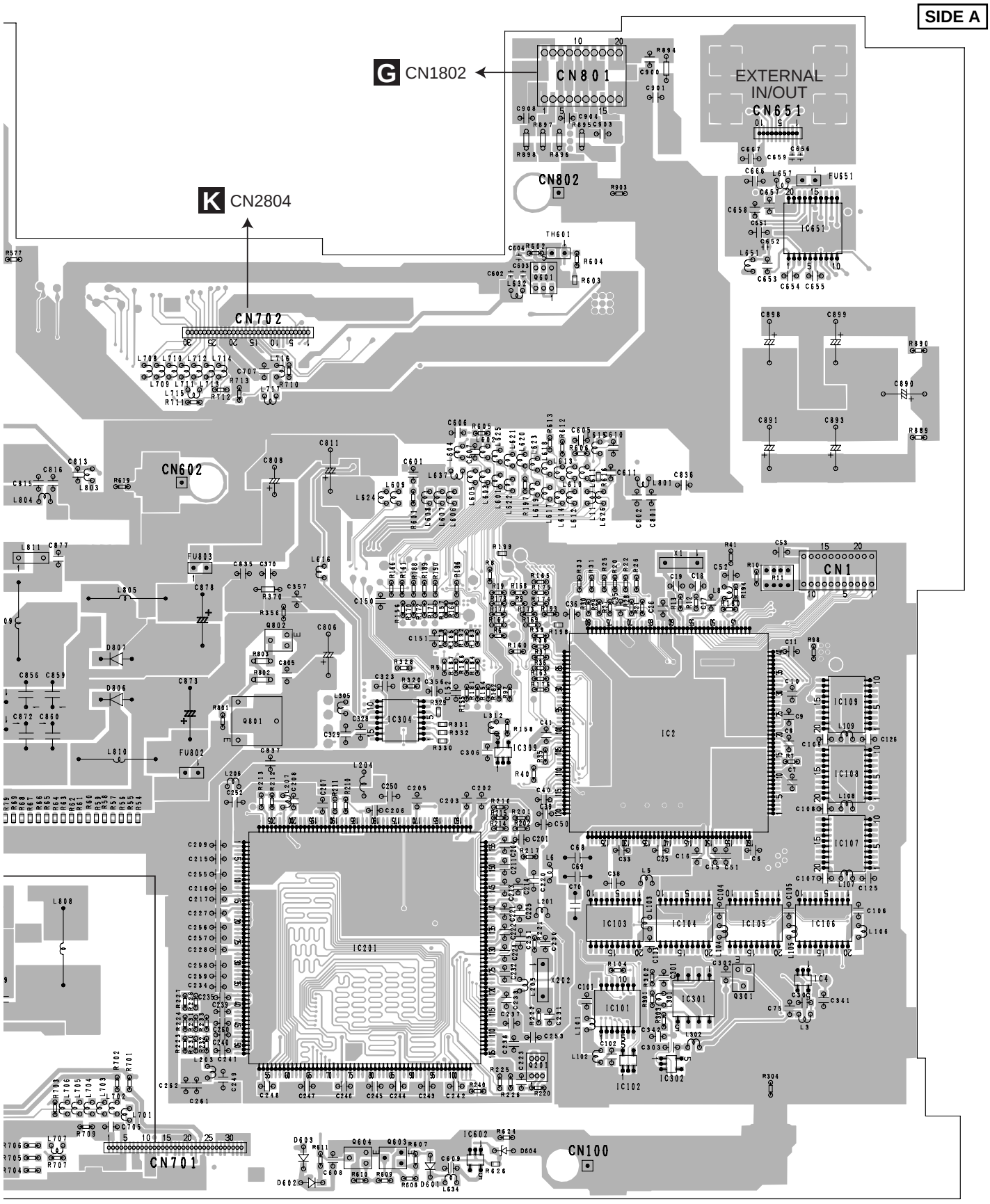
SIDE A
G CN1802
CN801
EXTERNAL IN/OUT
CN651
CN802
K CN2804
CN702
CN602
CN1
IC2
IC201
CN701
CN100
FRONT

A CC UNIT

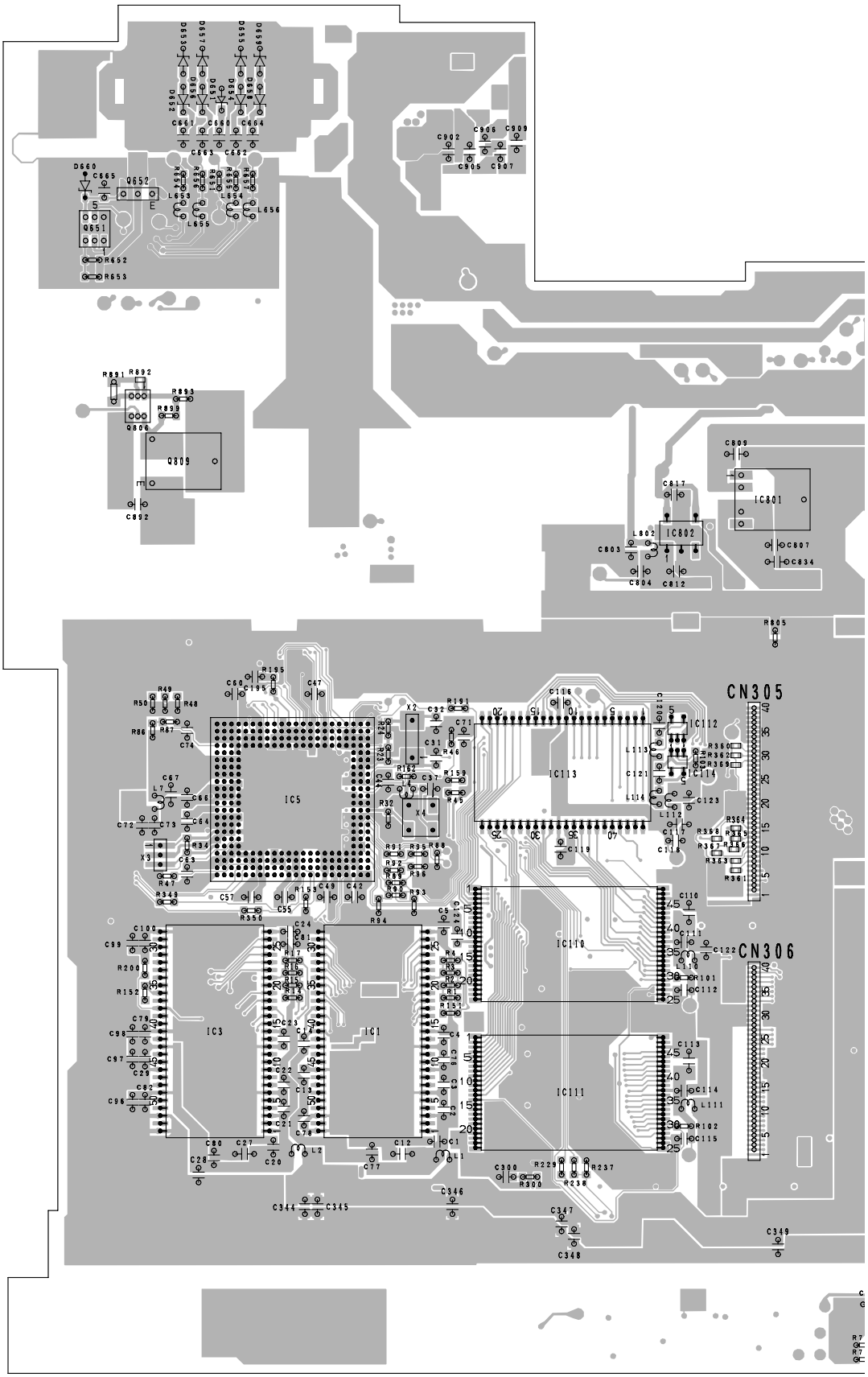

CN305
CN306
IC5
IC3
IC1
IC110
IC111
IC112
IC113
IC114
IC801
IC802
Q651
Q652
Q806
Q809
170
160
150
140
130
120
110
100
90

A

SIDE B

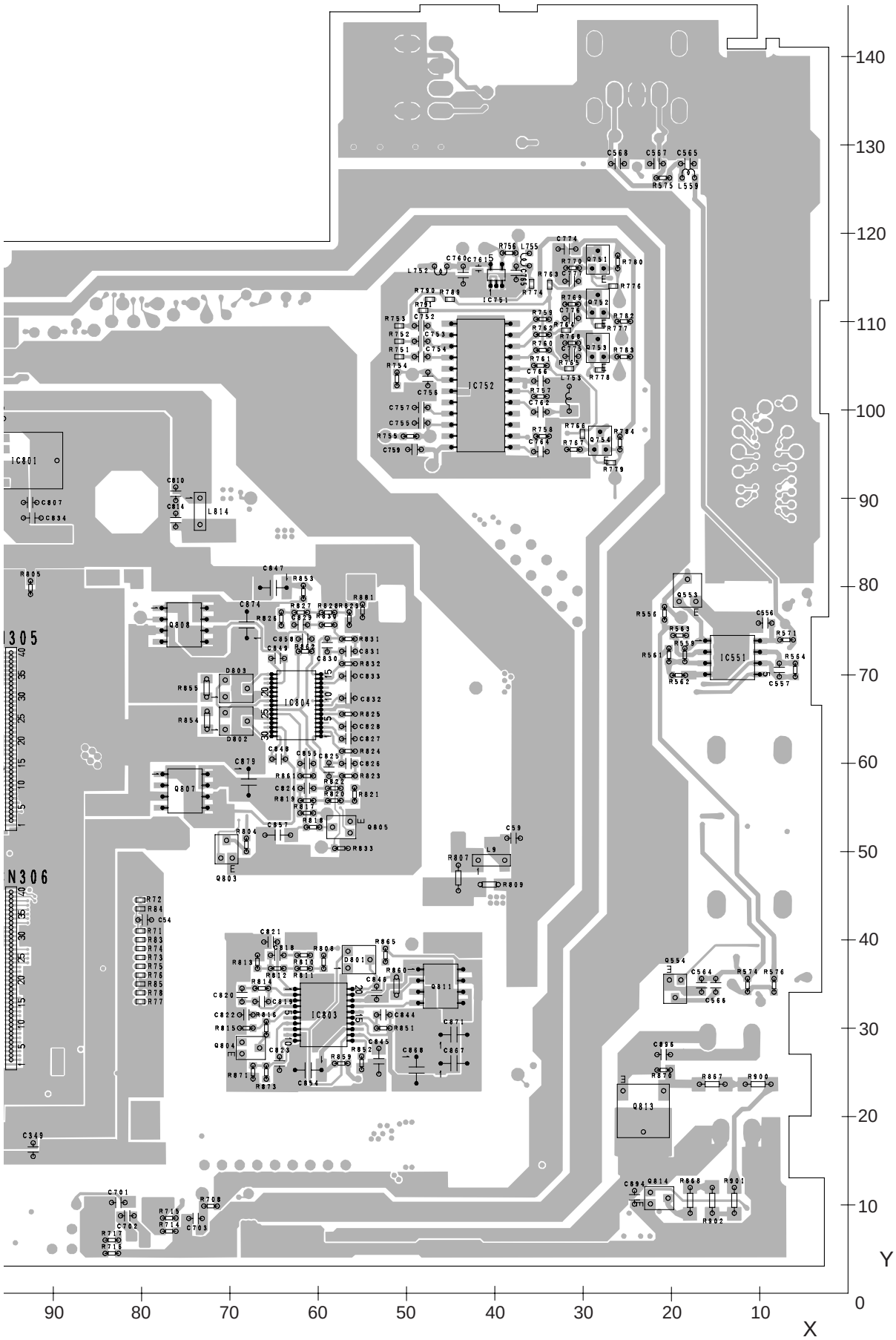
IC752
IC551
IC804
IC803
IC801
IC751
Q811
Q813
Q814
Q805
Q807
Q808
Q803
Q804
Q751
Q752
Q753
Q754
Q553
Q554
D801
D802
D803
L814
L9
L559
L752
L753
L755
L756
L758
L759
L760
L761
L762
L763
L764
L765
L766
L767
L768
L769
L770
L771
L772
L773
L774
L775
L776
L777
L778
L779
L780
L781
L782
L783
L784
L789
L790
L791
L792
L793
L794
L795
L796
L797
L798
L799
L800
L801

4.2 GPS UNIT

B GPS UNIT

SIDE A

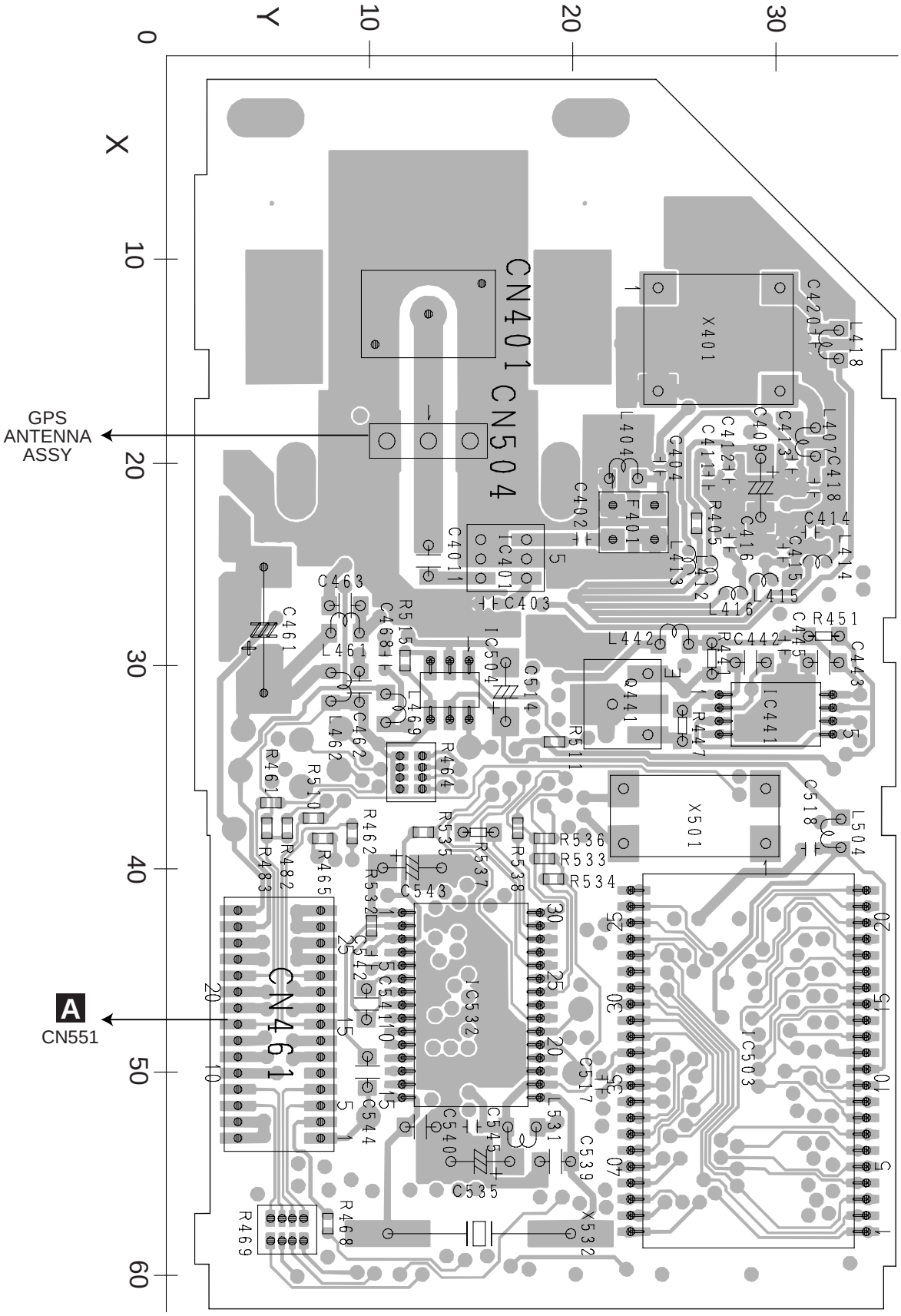

B GPS UNIT

SIDE B

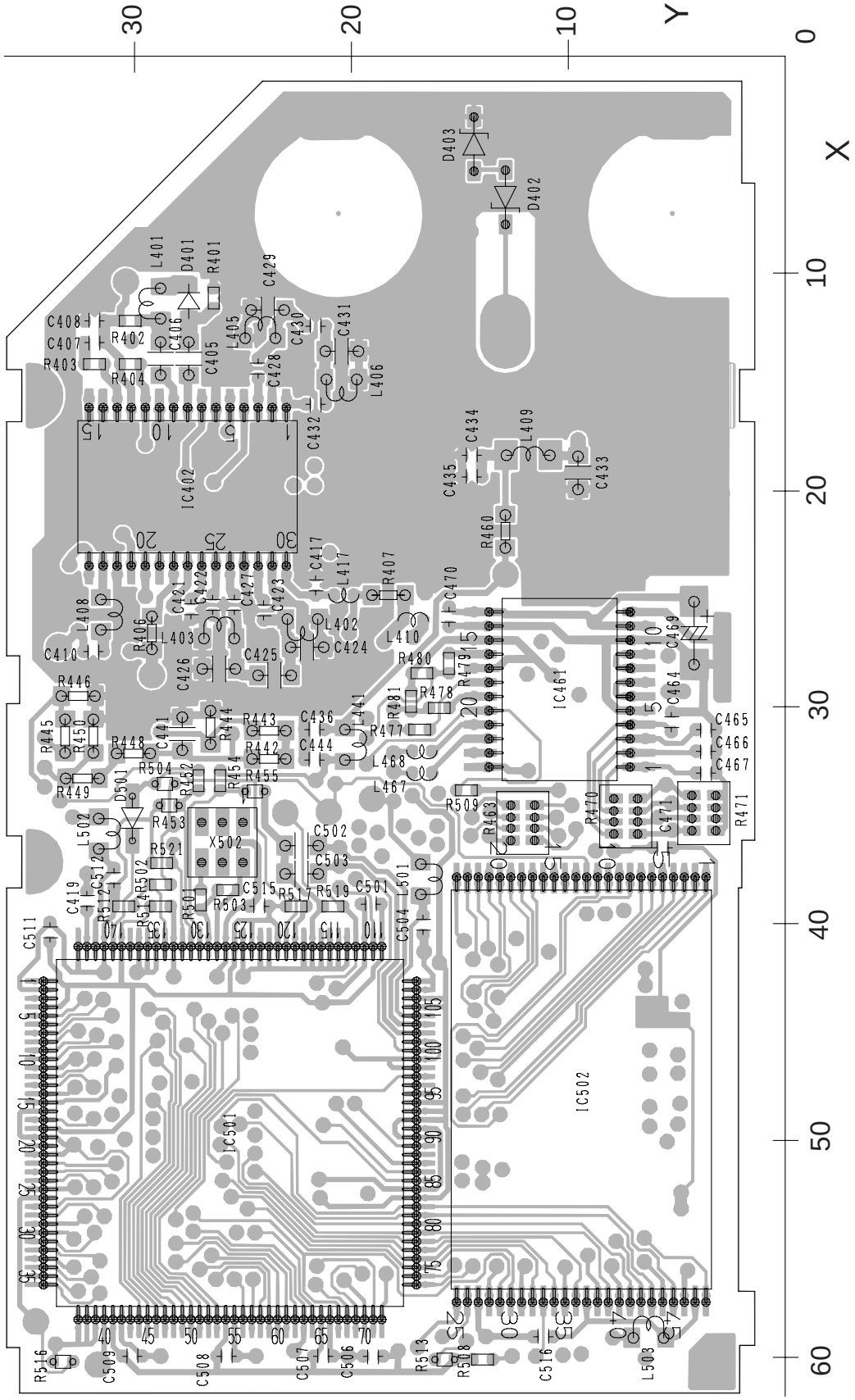

4.3 DVD CORE UNIT(MS3R)

C DVD CORE UNIT (MS3R)

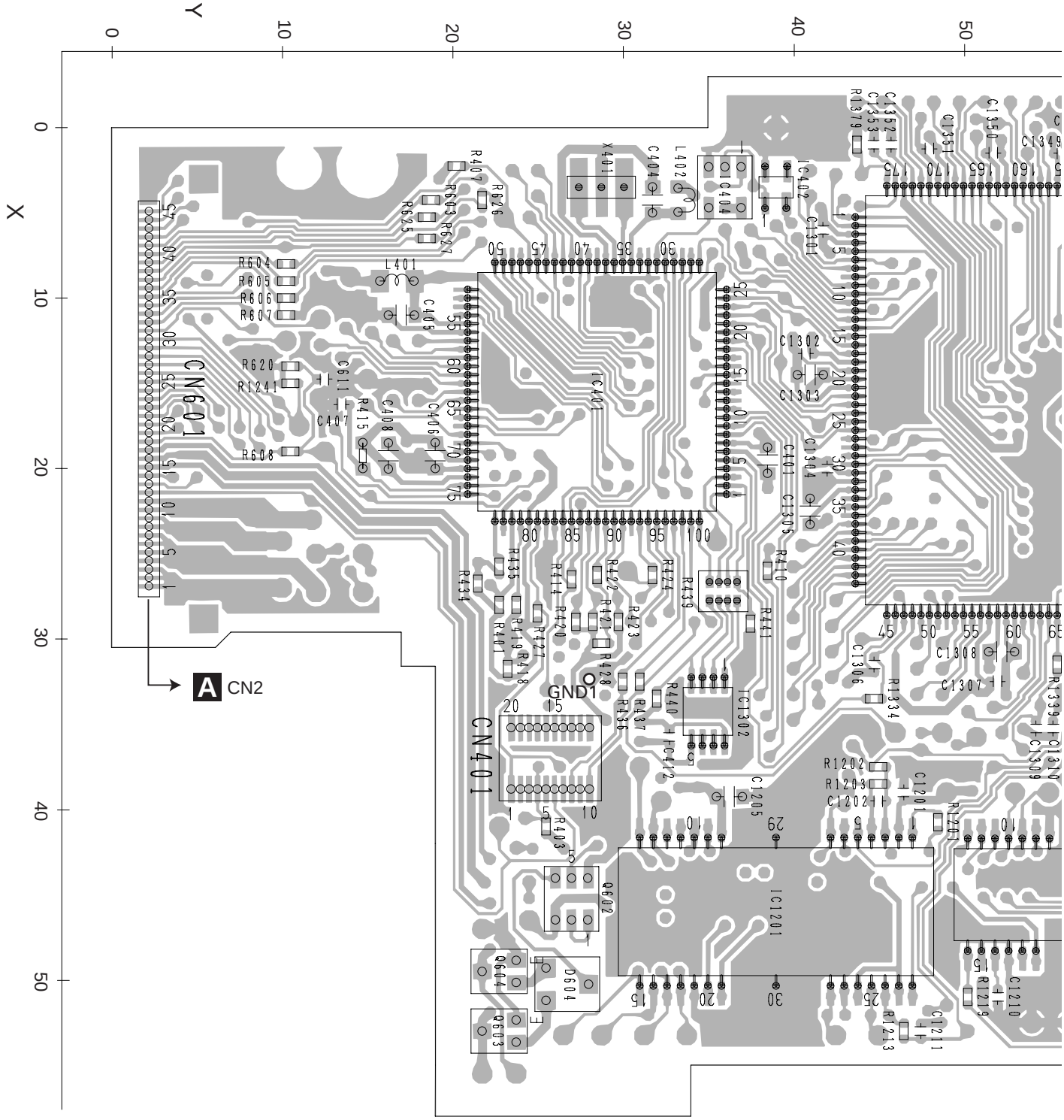

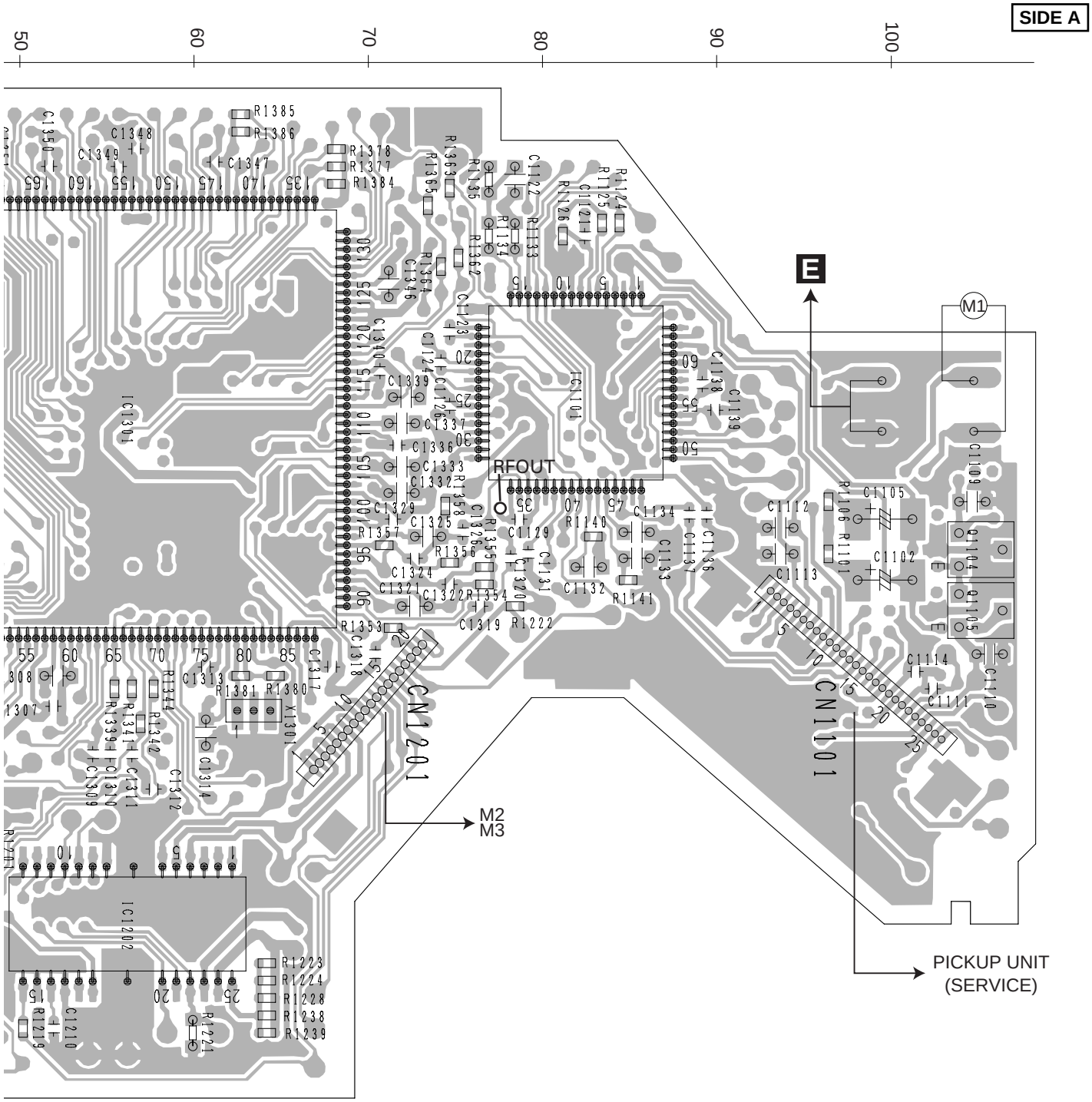
SIDE A
50
60
70
80
90
100
E
M1
RFOUT
CN1201
CN1101
M2
M3
PICKUP UNIT
(SERVICE)
IC1301
IC1101
IC1202
X1301

C

C DVD CORE UNIT (MS3R)

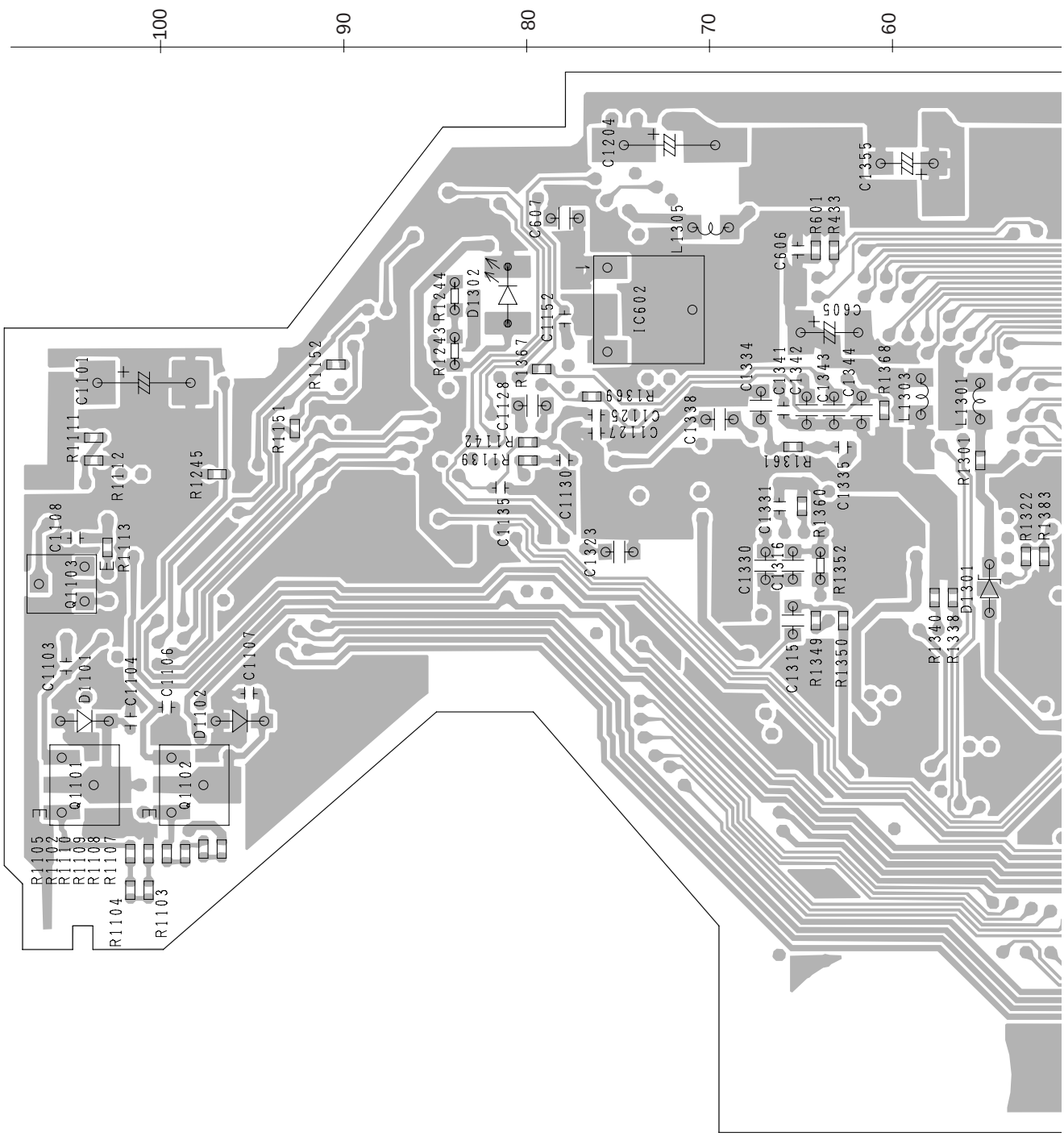

SIDE B

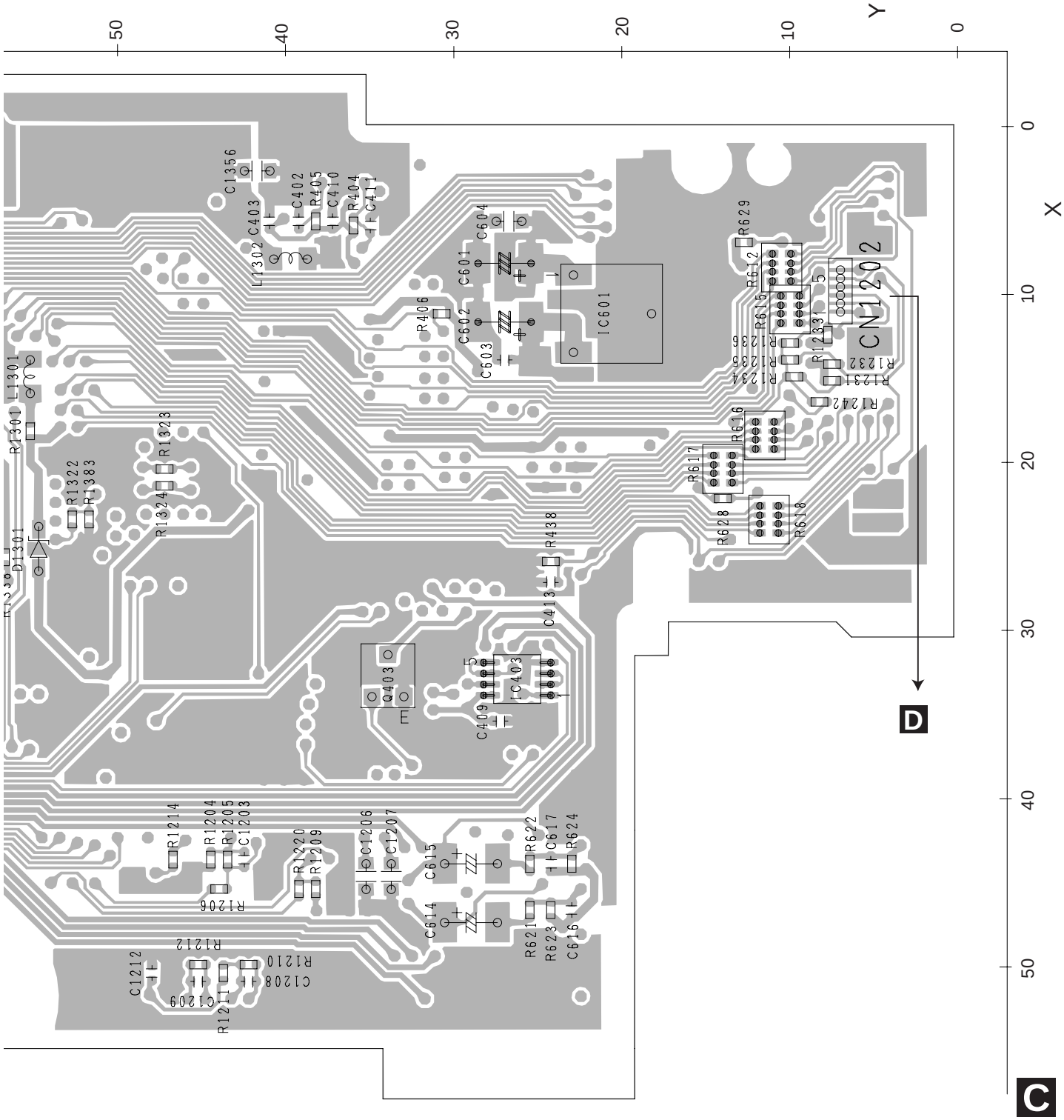
Y
X
C1356
C403
L1302
C402
R405
C410
R404
C411
C604
C601
C602
C603
R406
IC601
R629
R612
R615
CN1202
R1236
R1235
R1234
R1233
R1232
R1231
R1242
R616
R617
R628
R618
L1301
R1301
R1322
R1383
R1323
R1324
D1301
R438
C413
Q403
IC403
C409
R1214
R1204
R1205
C1203
R1206
R1220
R1209
C1206
C1207
C615
C614
R622
C617
R624
R621
R623
C616
C1212
R1212
R1210
C1208
C1209
R1211
D
C

4.4 COMPOUND UNIT(A) AND COMPOUND UNIT(B)

D COMPOUND UNIT(A)

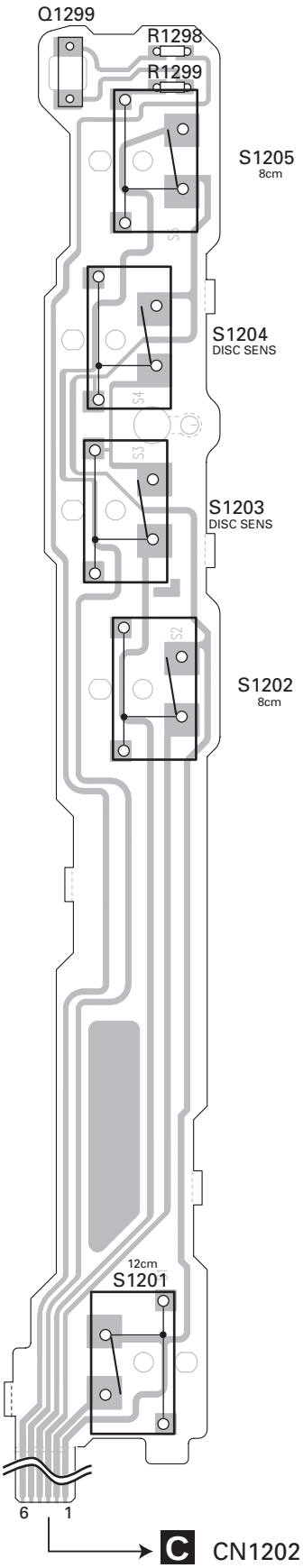

E COMPOUND UNIT(B)

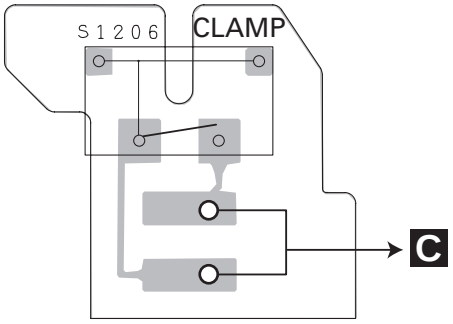

D E

A

B

C

D

E

F

4.5 CD CORE UNIT(S10.1)

F CD CORE UNIT(S10.1)

SIDE A

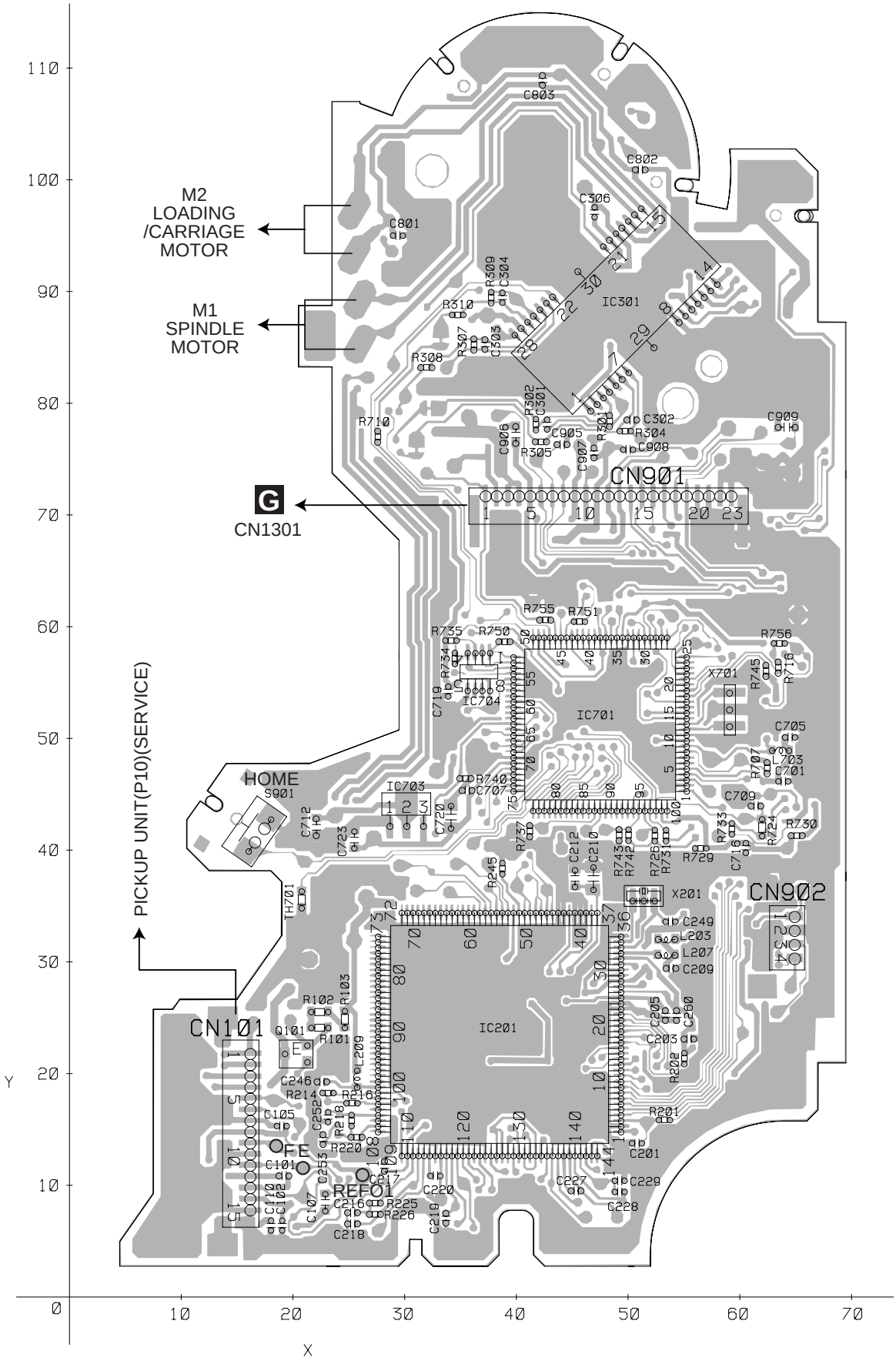

F

F CD CORE UNIT(S10.1)

SIDE B

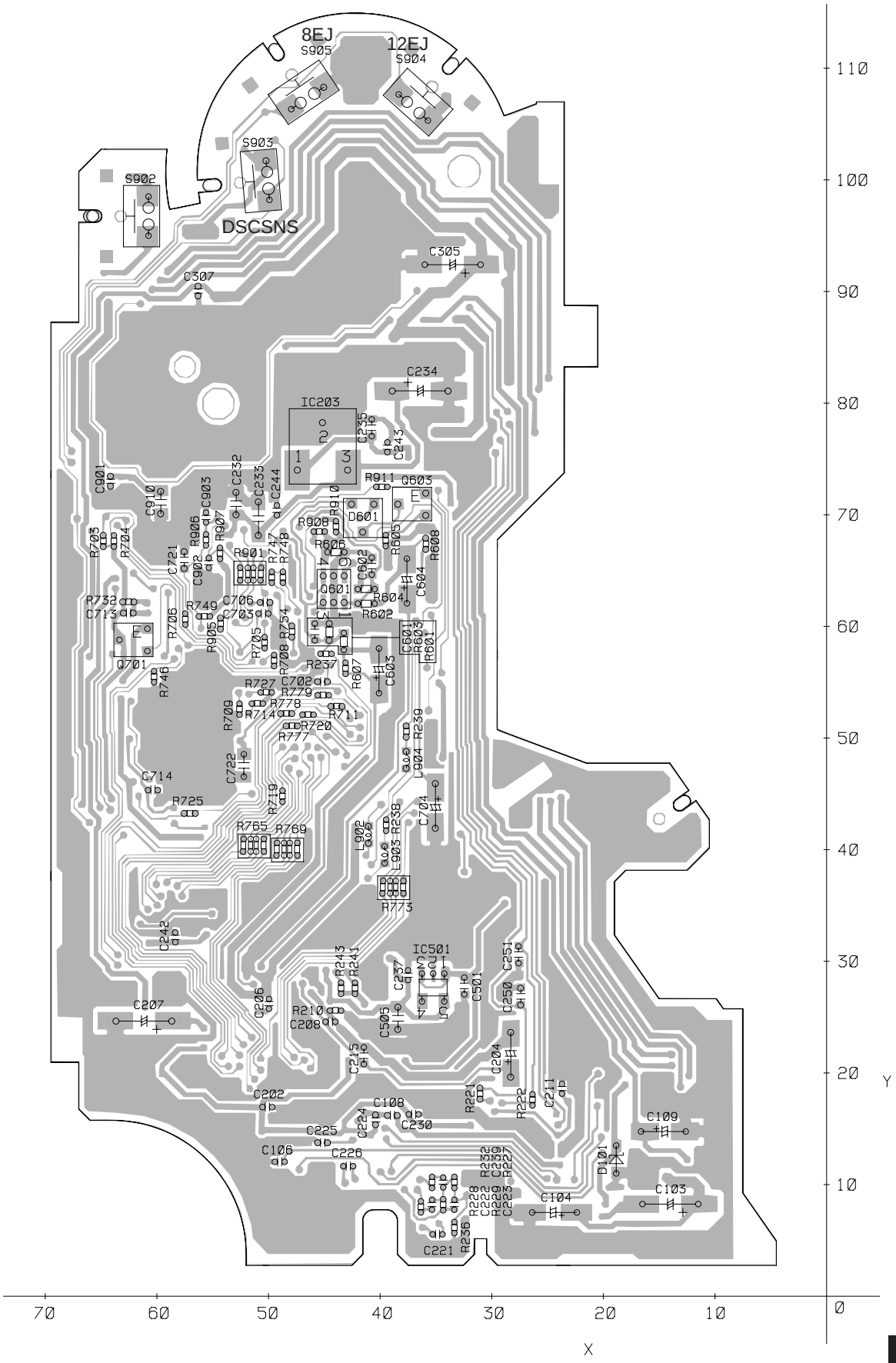

F

4.6 SYSTEM UNIT

G SYSTEM UNIT

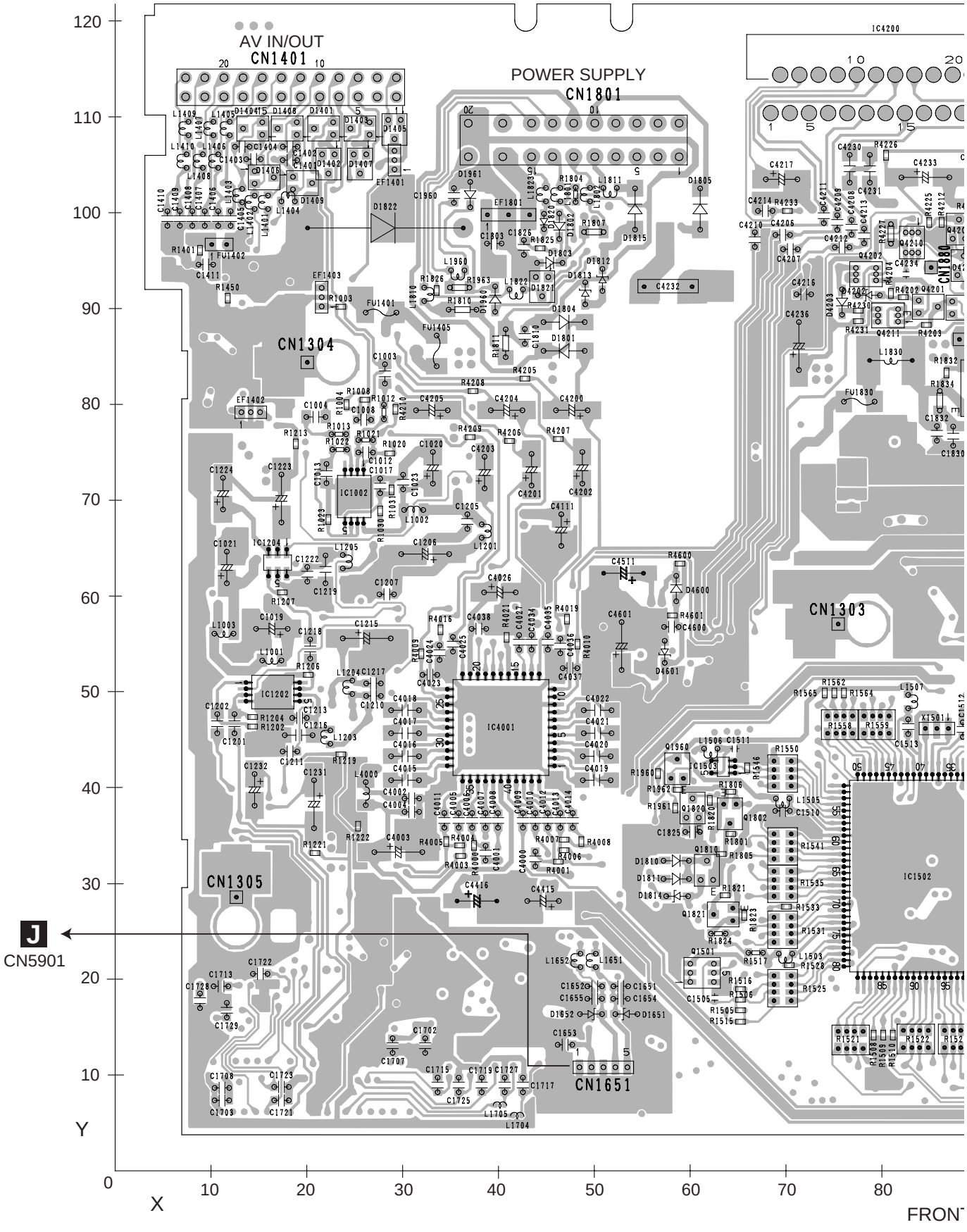

SIDE A

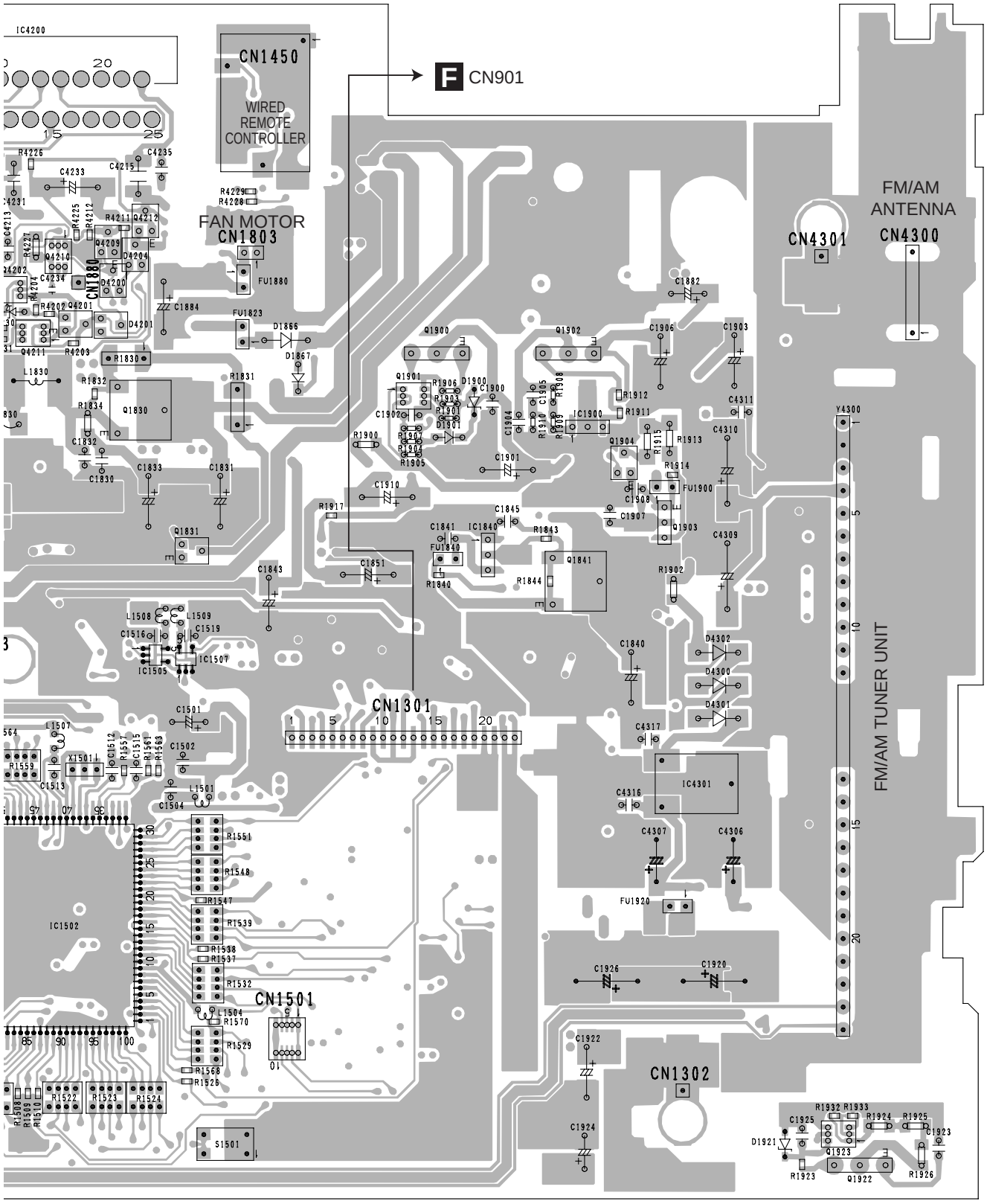

80 90 100 110 120 130 140 150 160 170

FRONT

G

G SYSTEM UNIT

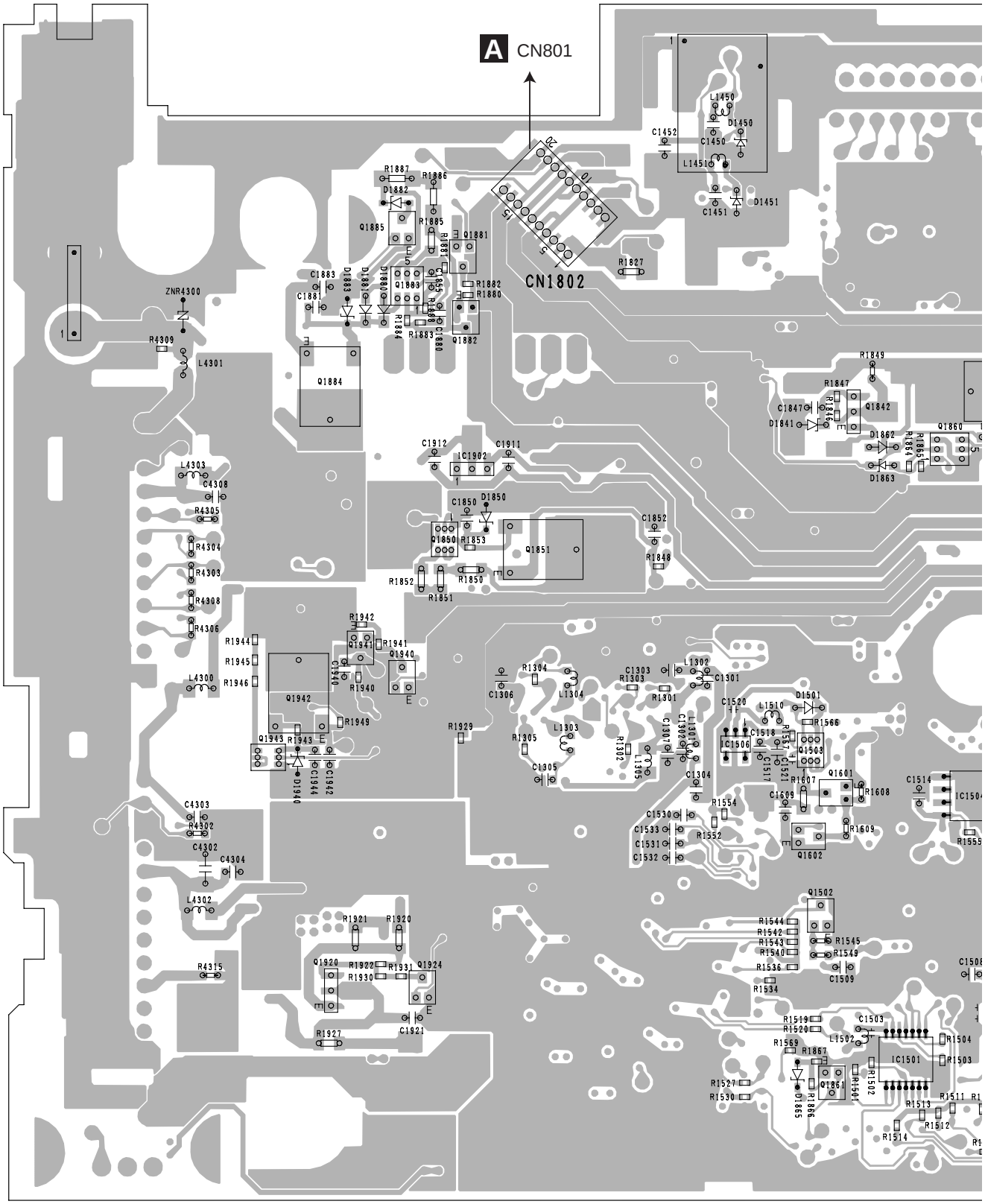

SIDE B

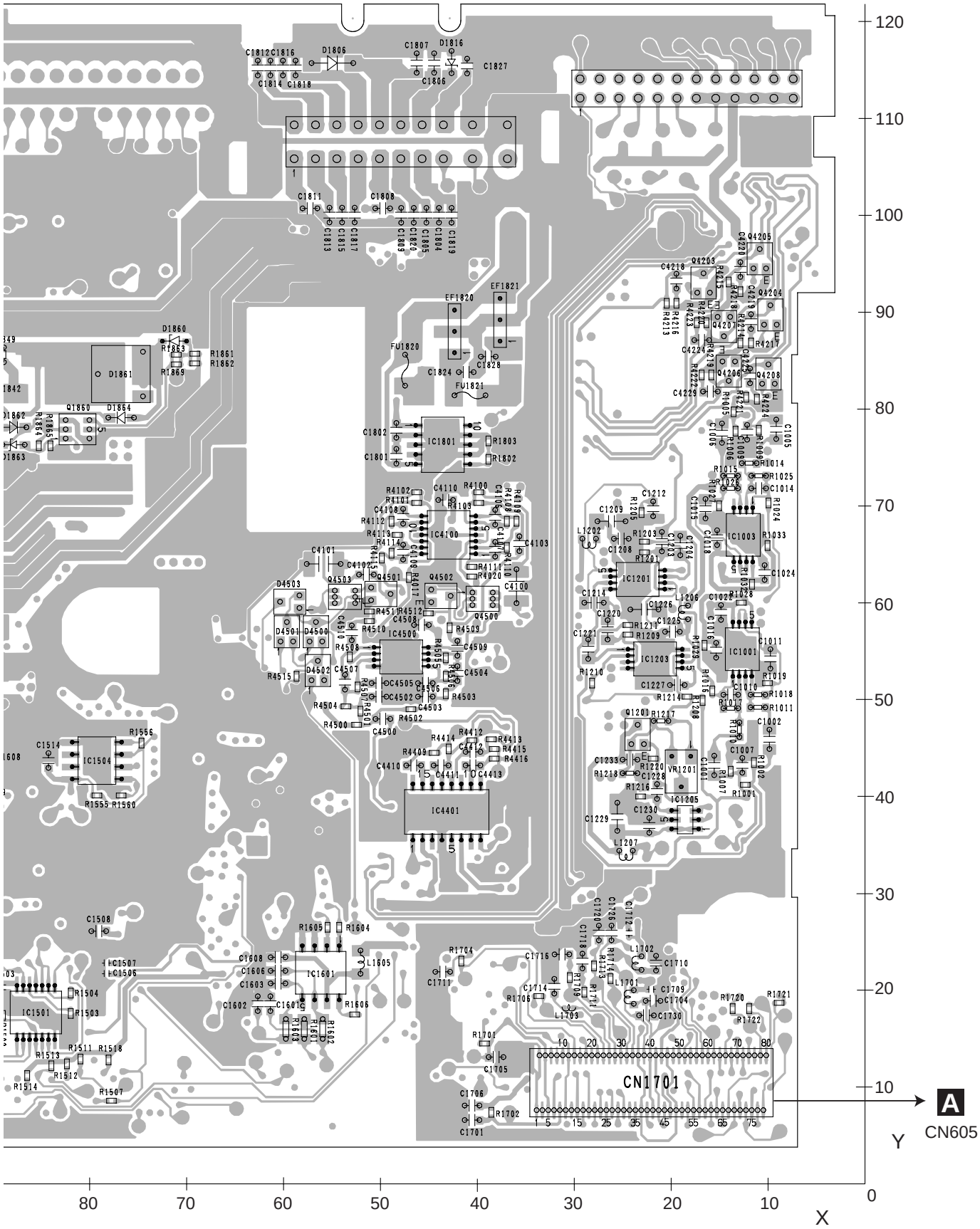

4.7 MONITOR PCB

MONITOR PCB

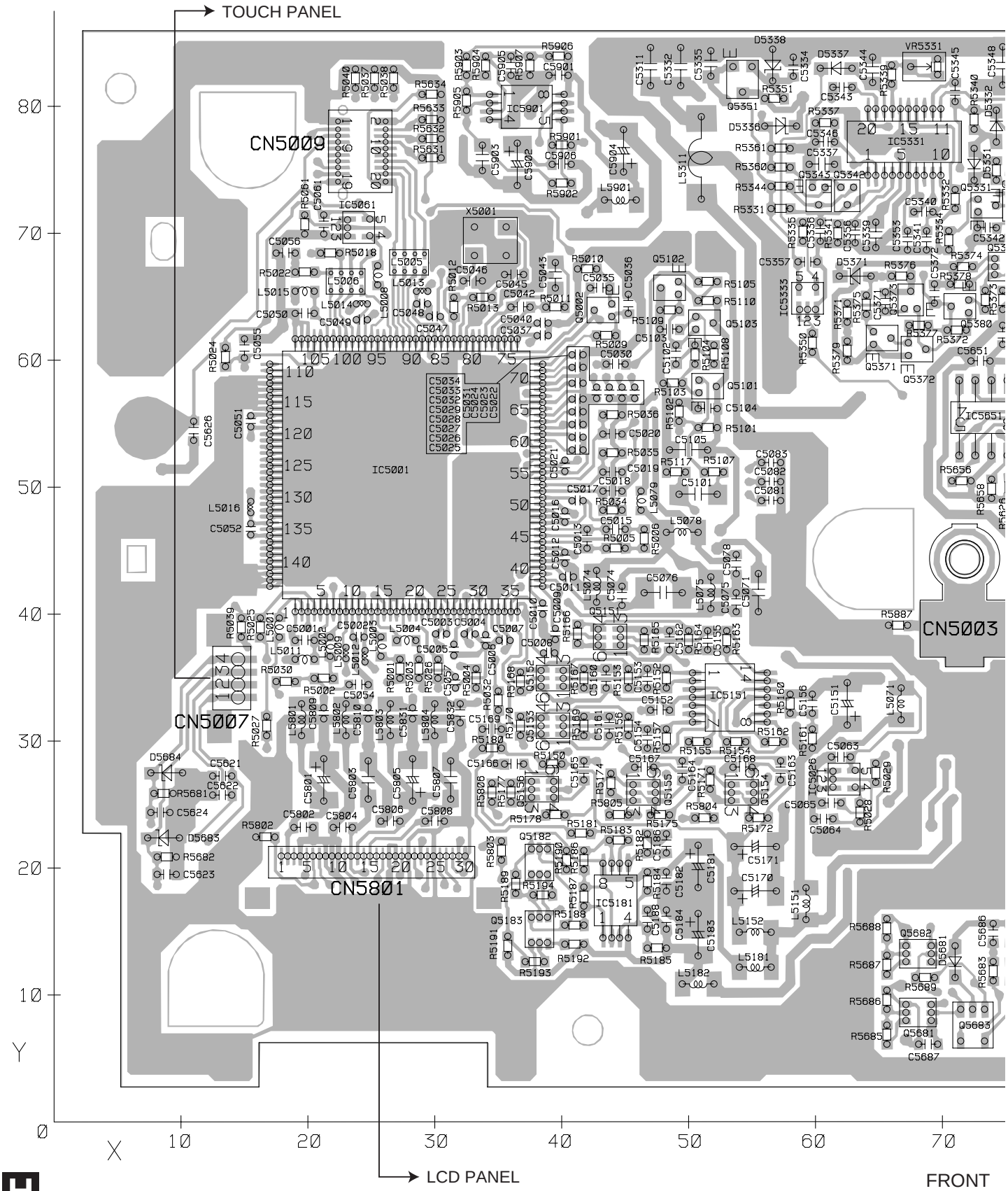

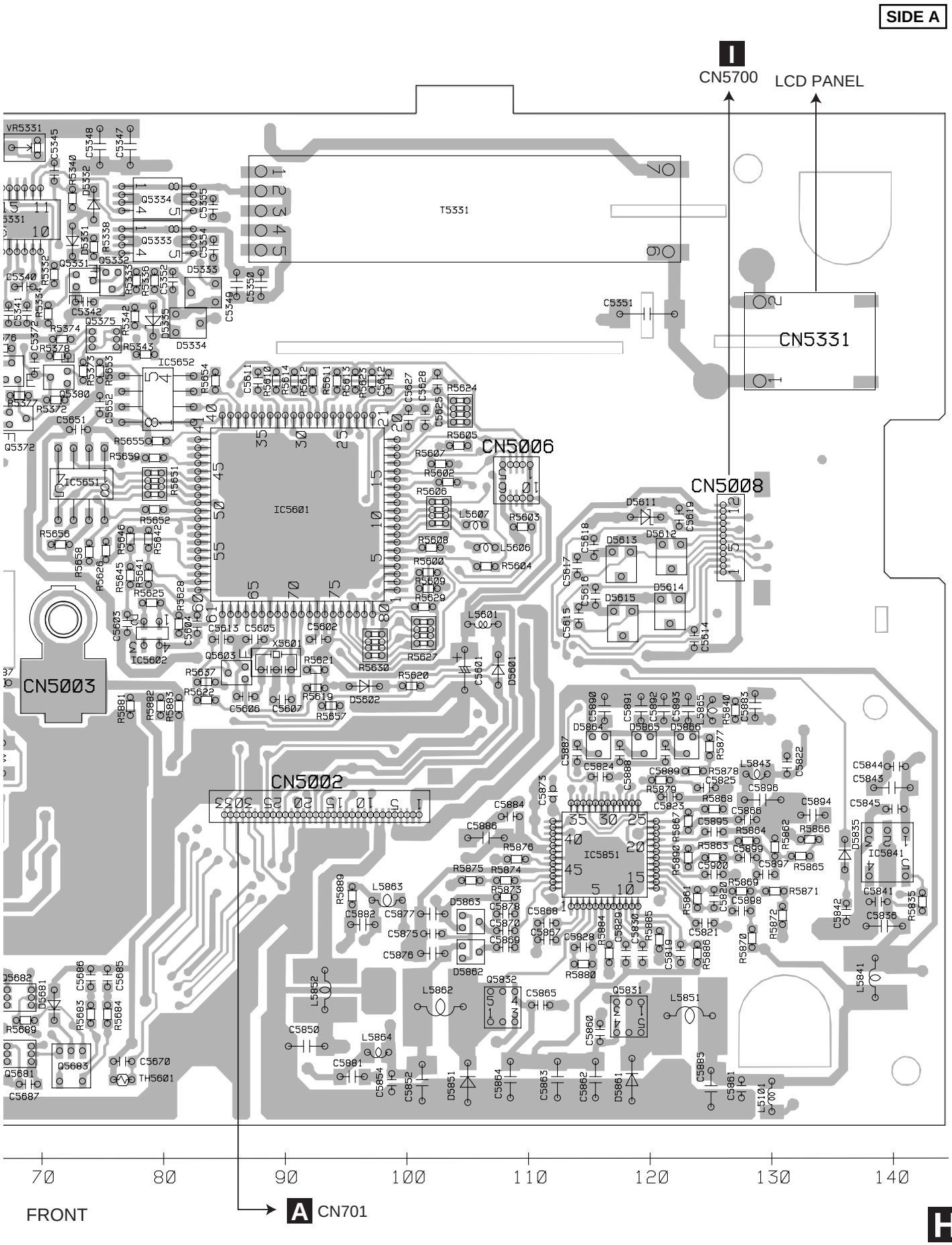
SIDE A
A
B
C
D
E
F
I
CN5700
LCD PANEL
CN5331
CN5006
CN5008
CN5003
CN5002
T5331
IC5601
IC5651
IC5652
IC5602
IC5851
IC5841
X5601
Q5334
Q5333
Q5332
Q5331
Q5375
Q5380
Q5372
Q5603
Q5682
Q5681
Q5683
Q5832
Q5831
TH5601
70
80
90
100
110
120
130
140
FRONT
A
CN701
H

H MONITOR PCB

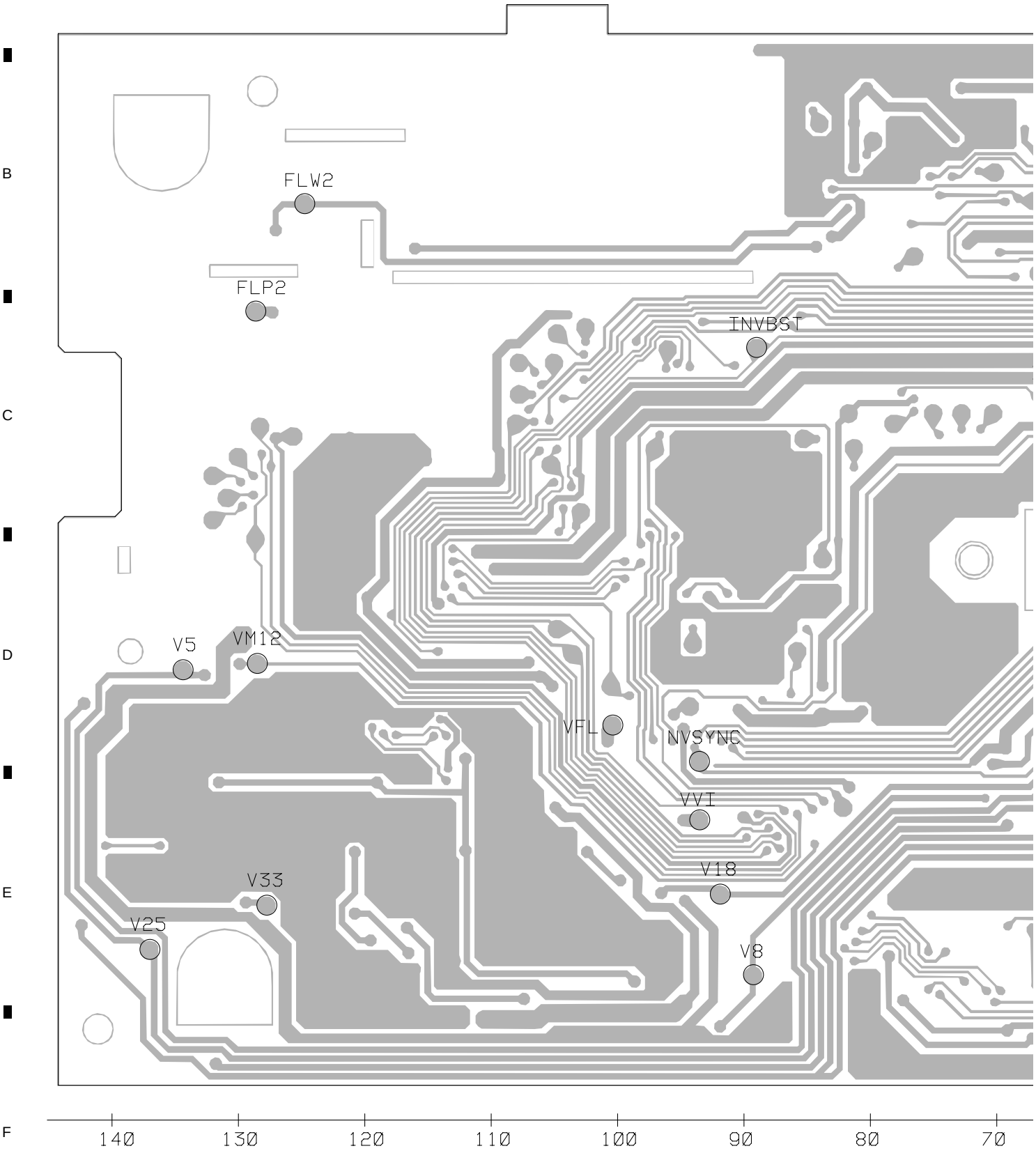

H

SIDE B

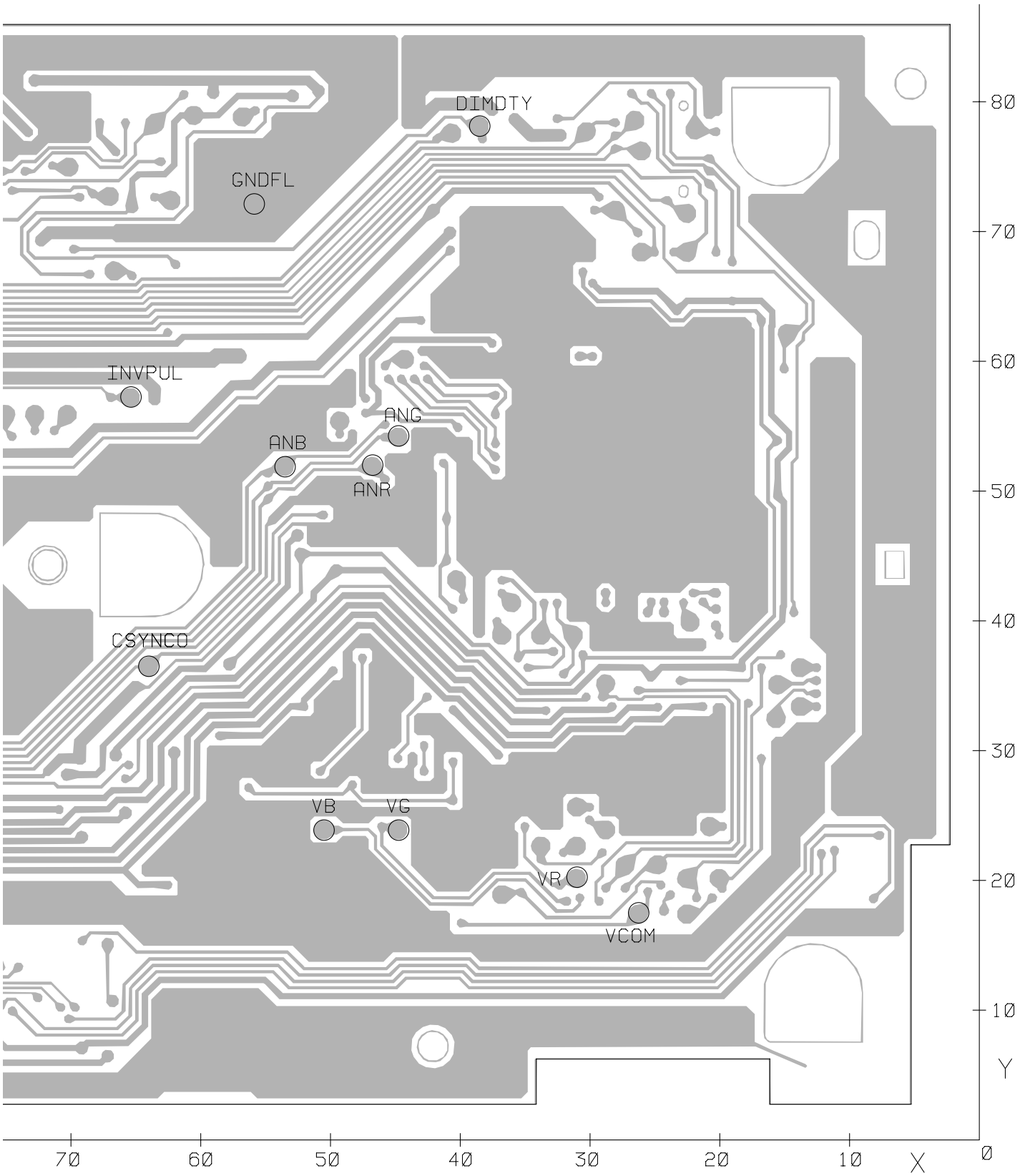
DIMDTY
GNDFL
INVPUL
ANG
ANB
ANR
CSYNCO
VB
VG
VR
VCOM
80
70
60
50
40
30
20
10
0
Y
70
60
50
40
30
20
10
X

4.8 KEYBOARD PCB

KEYBOARD PCB

SIDE A

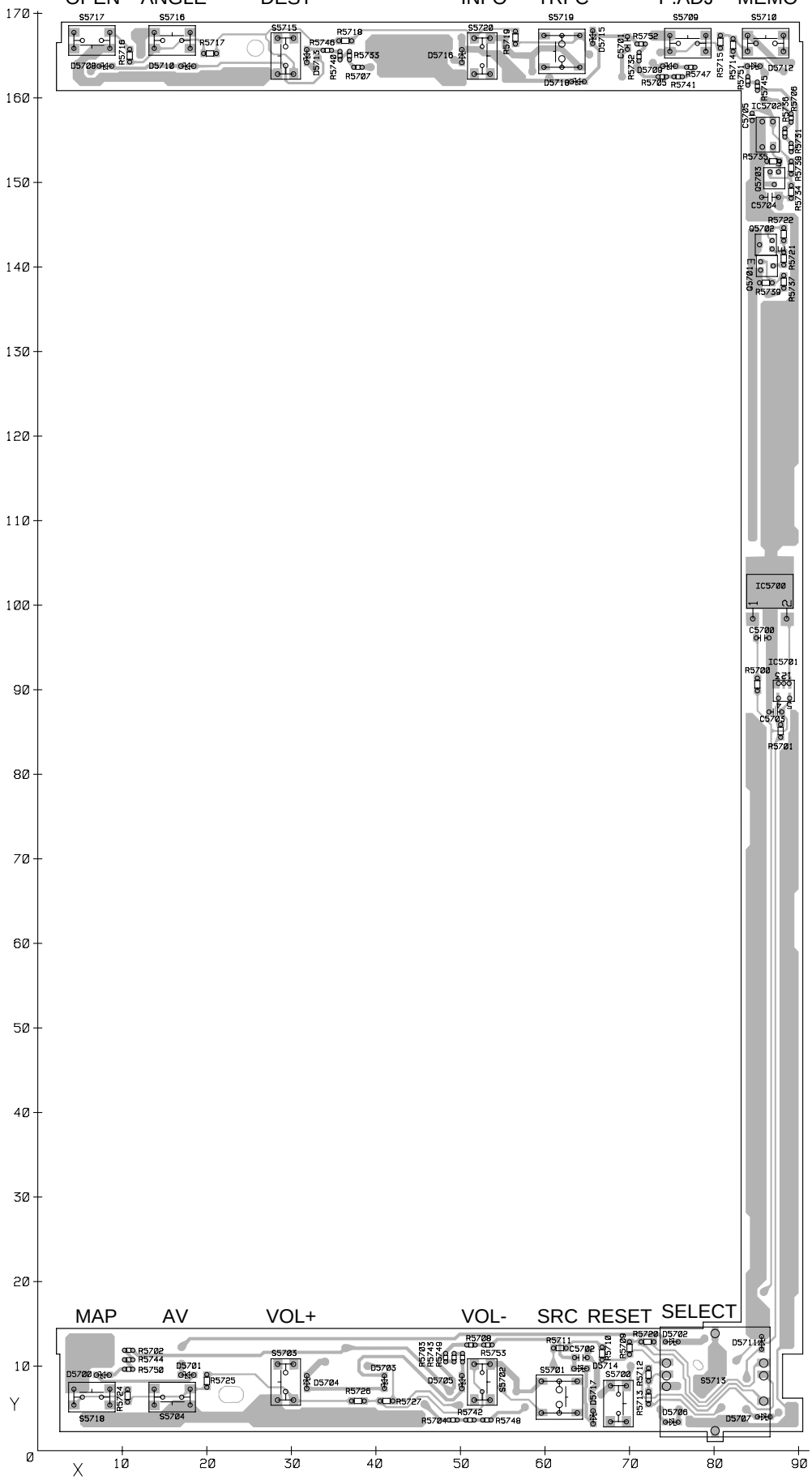

I KEYBOARD PCB

SIDE B

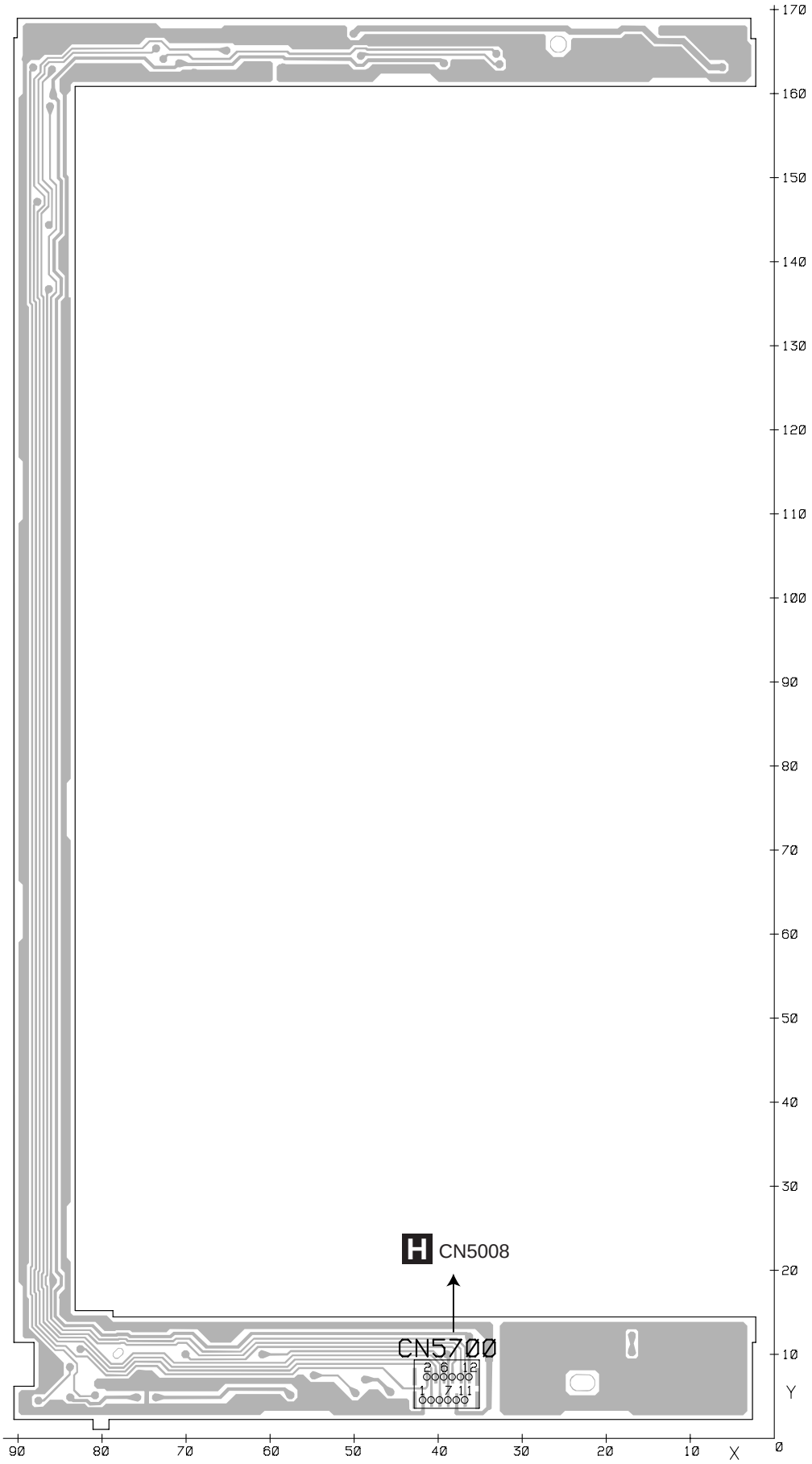

4.9 PANEL PCB

J PANEL PCB

SIDE A

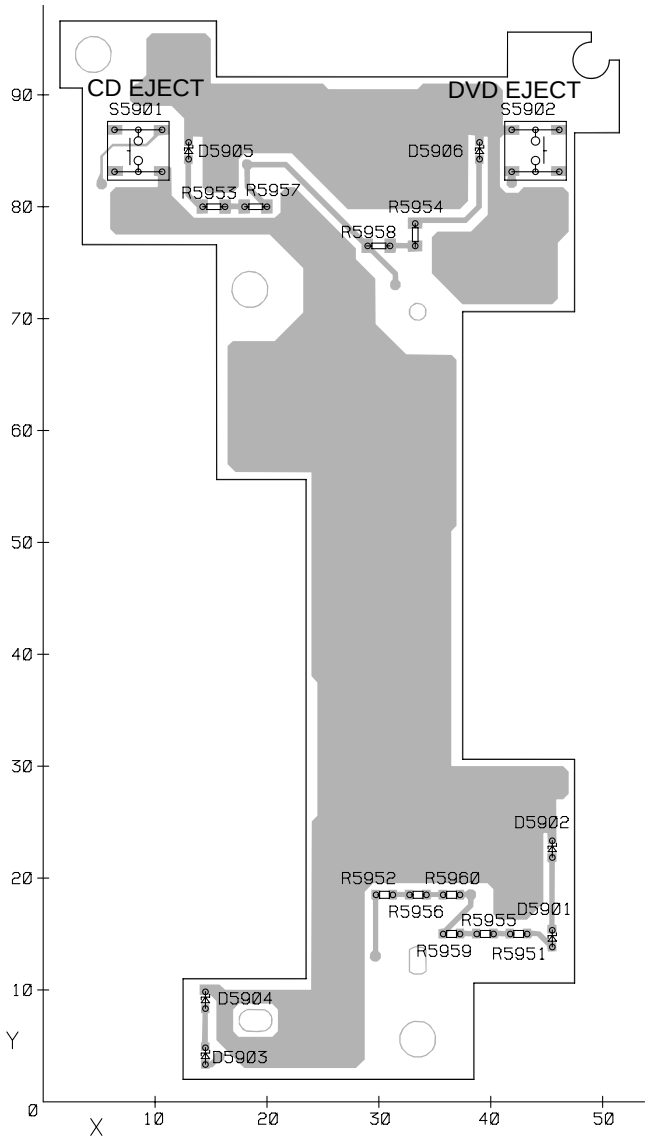

J PANEL PCB

SIDE B

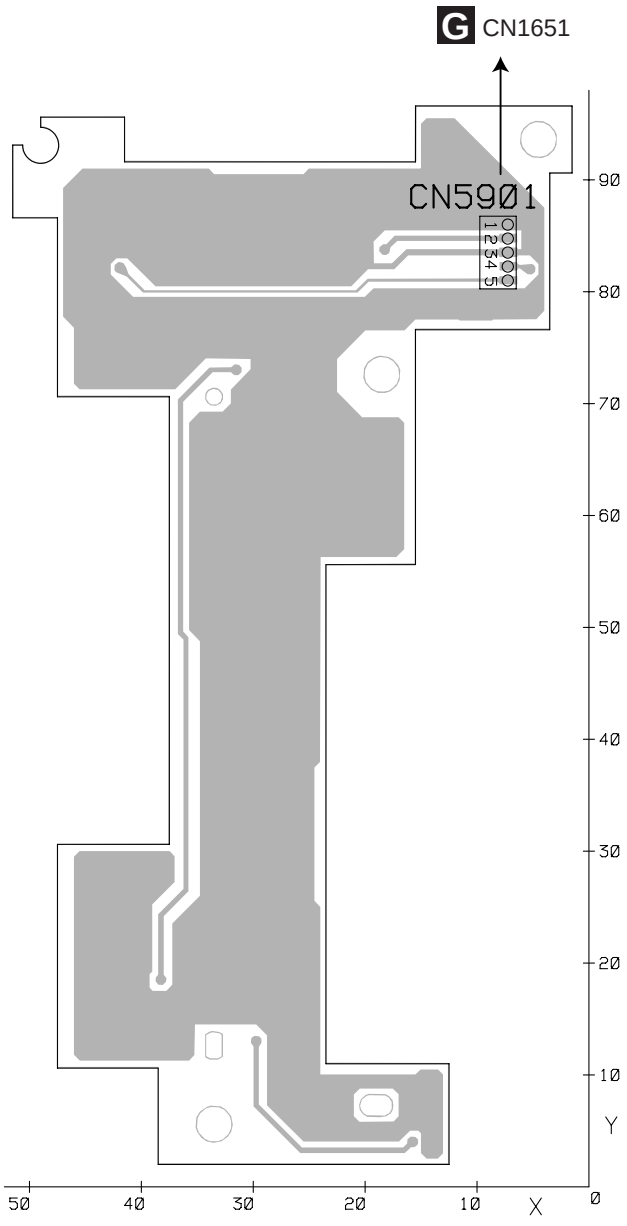

J

A

B

C

D

E

F

4.10 CONNECTOR UNIT

A

K CONNECTOR UNIT

SIDE A

B

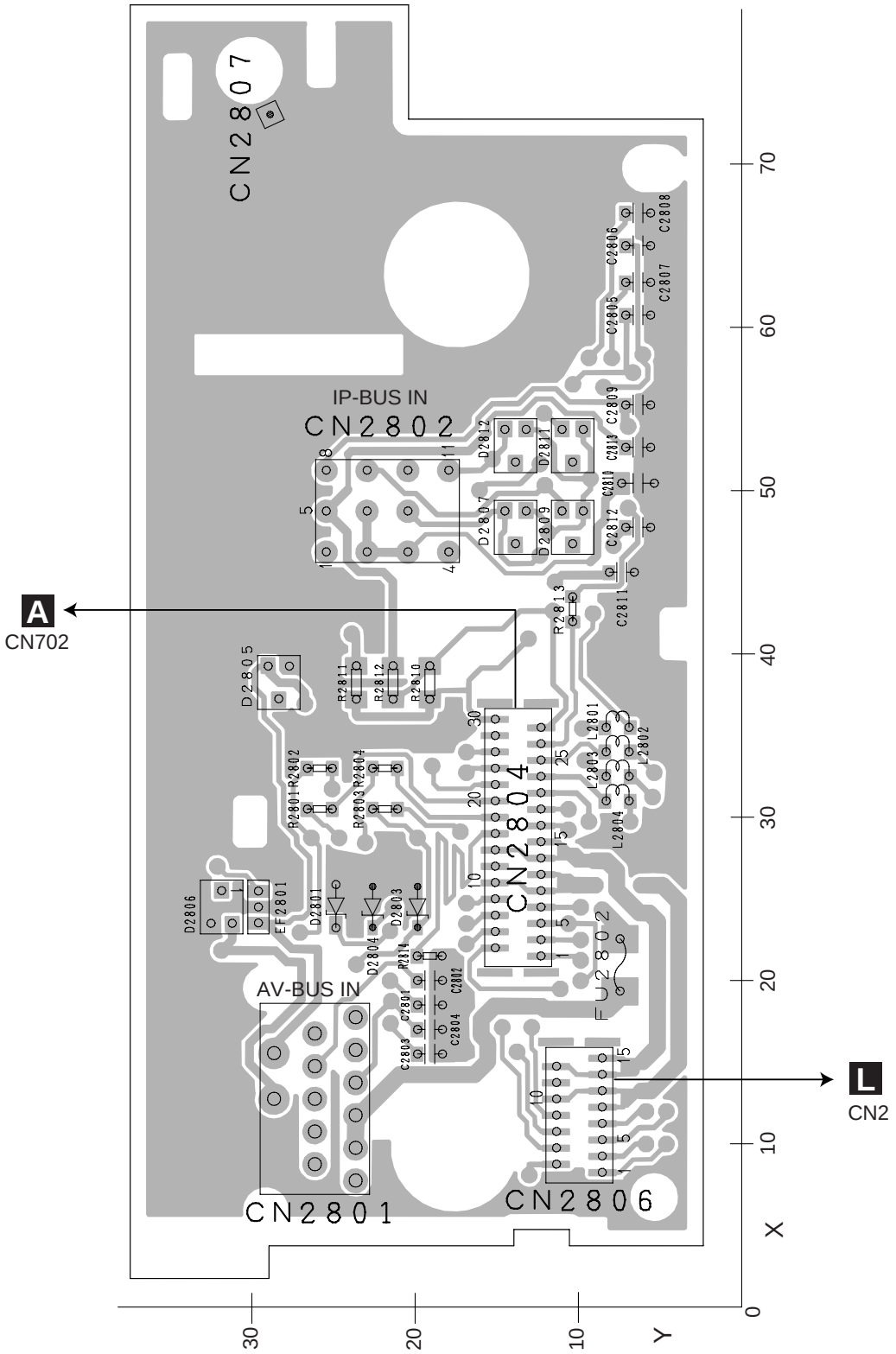

C

D

E

F

K

K CONNECTOR UNIT

SIDE B

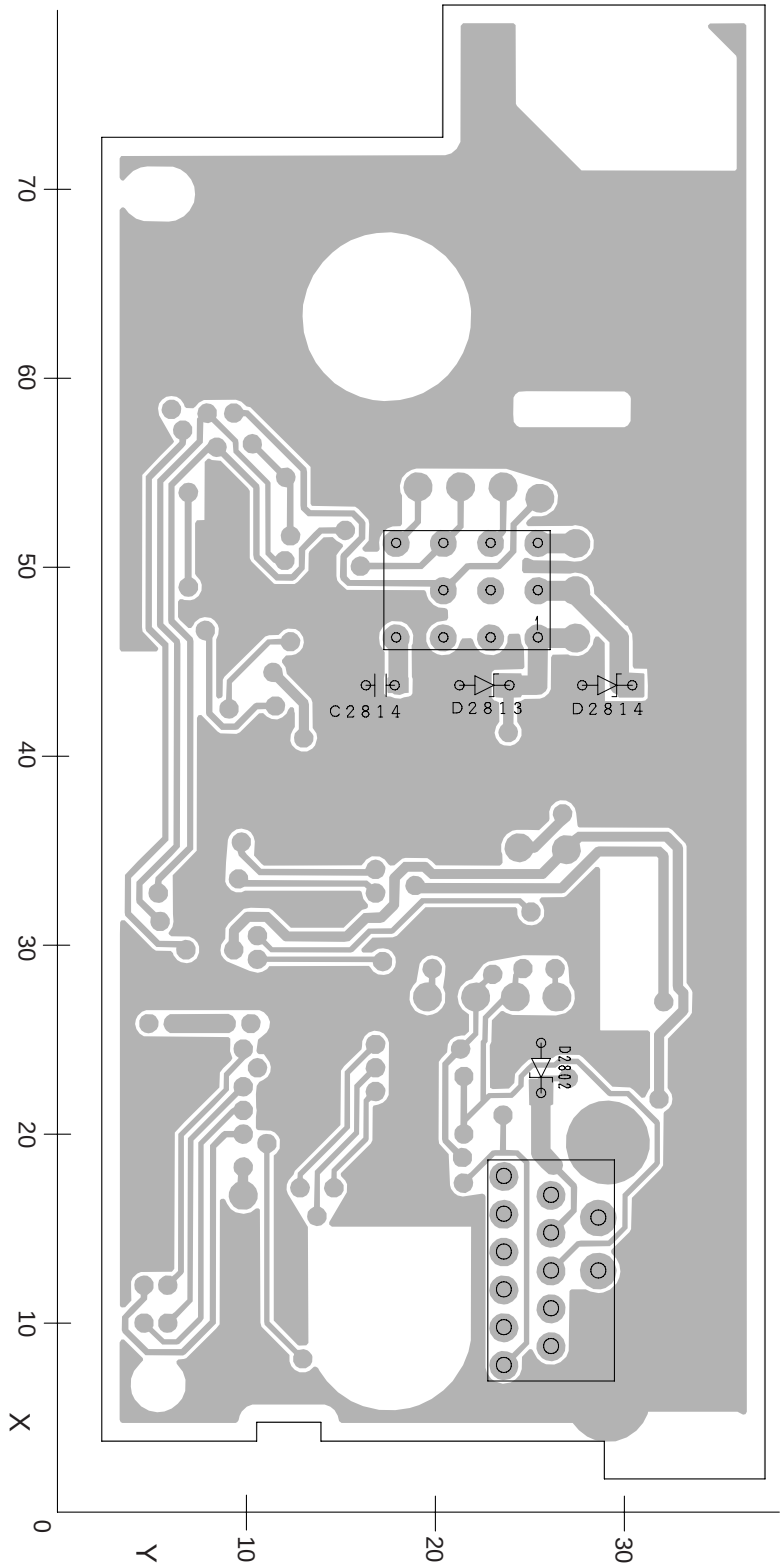

4.11 MAIN PCB UNIT

L MAIN PCB UNIT

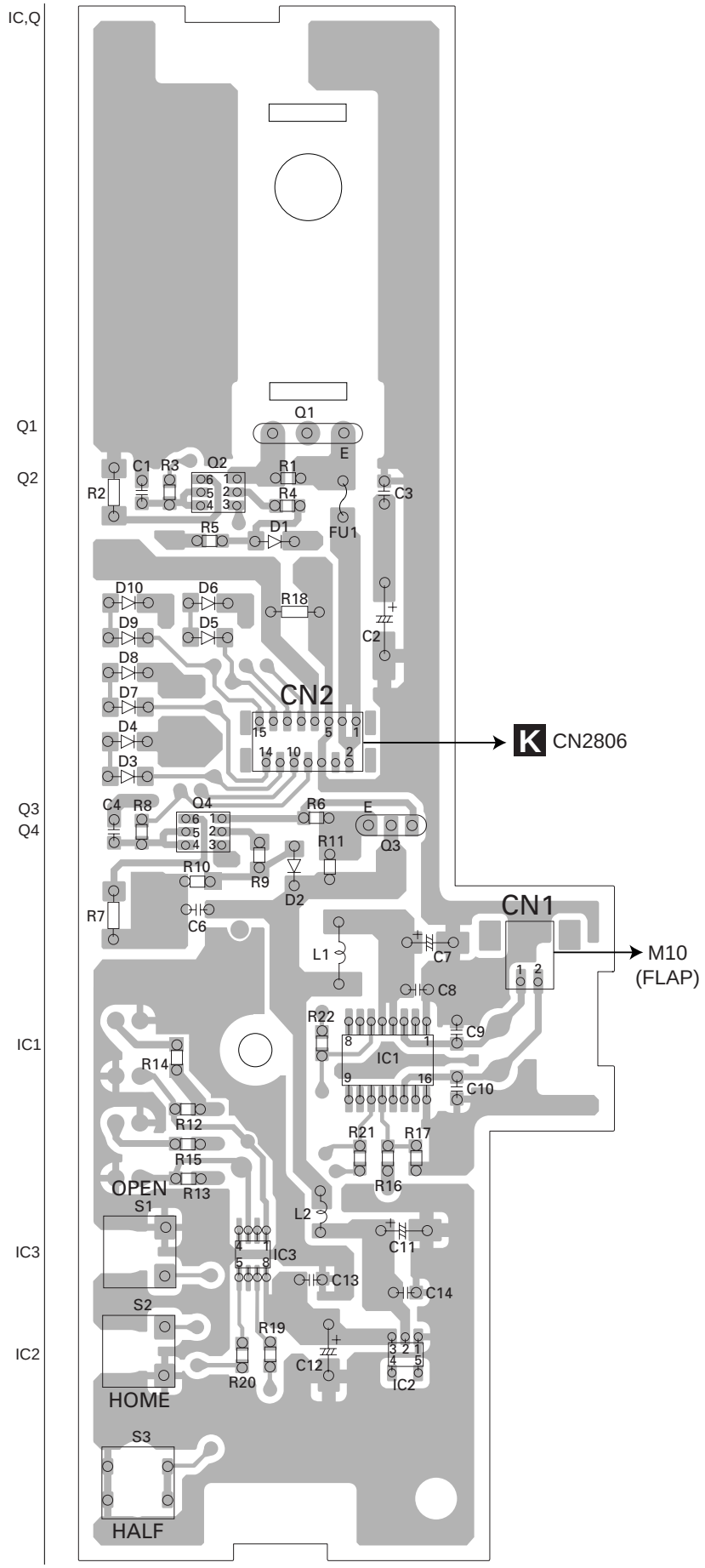

L

L MAIN PCB UNIT

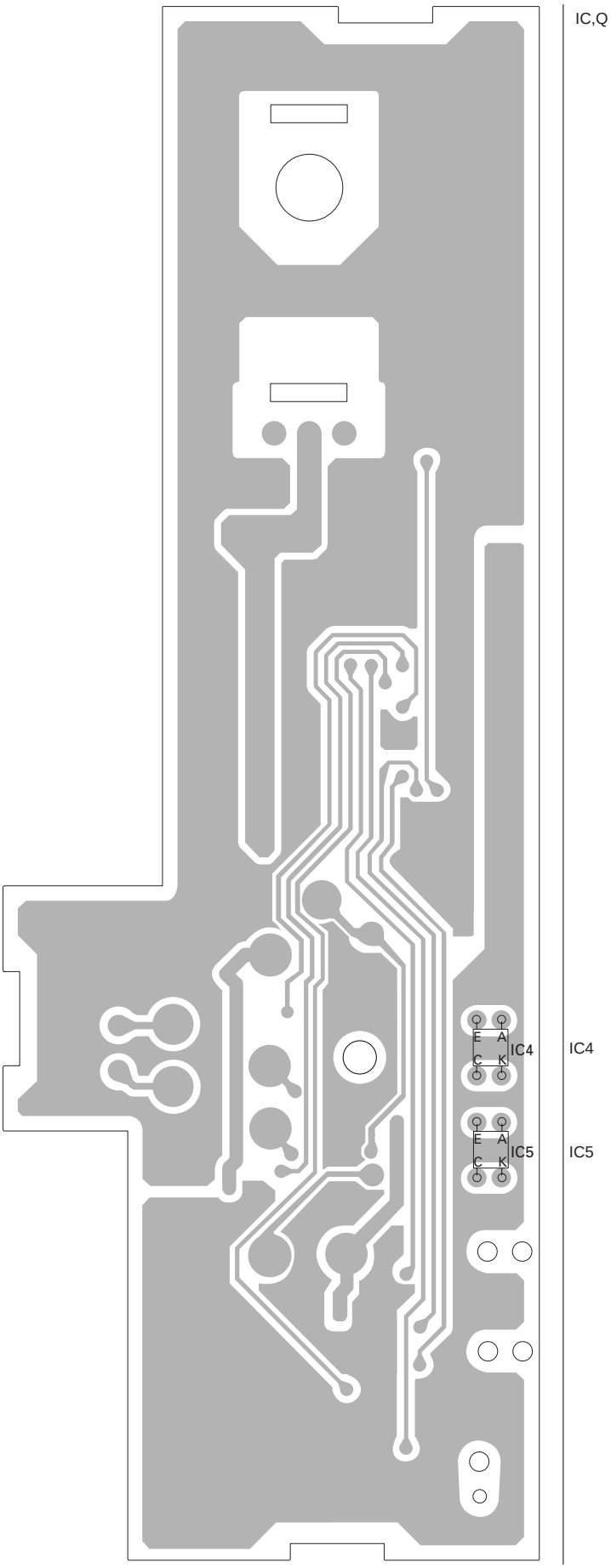

5. ELECTRICAL PARTS LIST

NOTE:

- *Parts whose parts numbers are omitted are subject to being not supplied.*
- *The part numbers shown below indicate chip components.*
  Chip Resistor
  RS1/◯S◯◯◯J,RS1/◯◯S◯◯◯J
  Chip Capacitor (except for CQS.....)
  CKS....., CCS....., CSZS.....
- *The ⚠ mark found on some component parts indicates the importance of the safety factor of the part. Therefore, when replacing, be sure to use parts of identical designation.*
- *Meaning of the figures and others in the parentheses in the parts list.*
  Example) IC 301 is on the point (face A, 91 of x-axis, and 111 of y-axis) of the corresponding PC board.
  IC 301 (A, 91, 111) IC NJM2068V

A

Unit Number:CWM9919
Unit Name:CC Unit

MISCELLANEOUS

Circuit Symbol and No.		Part No.
IC 1	(B,135,39) IC	K4S561632E-TL75
IC 2	(A,137,59) IC	UPD705103GM-180S1
IC 3	(B,151,39) IC	HY57V561620CLT-H
IC 4	(A,154,29) IC	TC7SZ08FU
IC 5	(B,143,63) IC	PD6336C
IC 101	(A,131,26) IC	TC74LCX08FTS1
IC 102	(A,133,20) IC	TC7SH04FUS1
IC 103	(A,131,36) IC	TC74LCX245FTS1
IC 104	(A,139,36) IC	TC74LCX245FTS1
IC 105	(A,148,36) IC	TC74LCX245FTS1
IC 106	(A,156,36) IC	TC74LCX245FTS1
IC 107	(A,159,46) IC	TC74LCX541FTS1
IC 108	(A,159,54) IC	TC74LCX541FTS1
IC 109	(A,159,63) IC	TC74LCX541FTS1
IC 110	(B,114,48) IC	PEH007A
IC 111	(B,114,32) IC	PEH008A
IC 112	(B,103,70) IC	TC7SH00FUS1
IC 113	(B,115,66) IC	M5M5V216ATP-70HI
IC 114	(B,103,67) IC	TC7SH08FUS1
IC 201	(A,101,33) IC	MB86291APFVS-G-DL
IC 301	(A,140,27) IC	M51957BFP
IC 302	(A,138,19) IC	TC7SH08FUS1
IC 304	(A,105,61) IC	AK4351VT
IC 309	(A,117,57) IC	TC7SH08FUS1
IC 551	(B,13,72) IC	NJM2904M
IC 602	(A,114,8) IC	TC7SH14FUS1
IC 651	(A,155,120) IC	UPD4721GSS1
IC 751	(B,40,115) IC	TC7SH08FUS1
IC 752	(B,42,103) IC	BH7236AF
IC 753	(A,43,110) IC	TC7SH08FUS1
IC 801	(B,91,94) IC	BA25BC0WFP
IC 802	(B,102,91) IC	S-818A33AUC-BGN
IC 803	(B,59,32) IC	TPS5103IDB
IC 804	(B,62,67) IC	TPS5102IDBT
Q 201	(A,122,19) Transistor	UMD2N
Q 301	(A,146,30) Transistor	DTC114EU
Q 551	(A,19,126) Transistor	DTC114EU
Q 552	(A,26,129) Transistor	2SA1576
Q 553	(B,18,80) Transistor	DTC114WK
Q 554	(B,20,34) Transistor	DTC114EU
Q 601	(A,122,114) Transistor	IMD2A
Q 603	(A,104,8) Transistor	2SA1576
Q 604	(A,100,8) Transistor	2SC4081
Q 651	(B,164,123) Transistor	IMD3A
Q 652	(B,159,128) Transistor	2SD1767
Q 751	(B,28,117) Transistor	2SA1576
Q 752	(B,28,112) Transistor	2SA1576
Q 753	(B,28,107) Transistor	2SA1576
Q 754	(B,28,97) Transistor	2SA1576
Q 801	(A,90,61) Transistor	2SB1184F5
Q 802	(A,90,71) Transistor	DTC114EU
Q 803	(B,70,50) Transistor	DTC114EU
Q 804	(B,68,28) Transistor	DTC114EU
Q 805	(B,57,53) Transistor	DTC114EU
Q 806	(B,159,104) Transistor	UMF23N
Q 807	(B,75,57) FET	RK4936
Q 808	(B,75,76) FET	RK4936
Q 809	(B,153,98) Transistor	2SD1760F5
Q 811	(B,46,35) FET	RK4936
Q 813	(B,23,18) Transistor	2SA1385-ZS1
Q 814	(B,21,11) Transistor	DTC114EU
D 551	(A,20,128) Diode	UDZS5R6(B)
D 552	(A,21,54) Diode	1SS355
D 601	(A,109,7) Diode	1SS355
D 602	(A,94,5) Diode	1SS355
D 603	(A,93,8) Diode	1SS355
D 604	(A,118,9) Diode	UDZS5R6(B)
D 651	(B,150,136) Diode	UDZS6R8(B)
D 652	(B,154,136) Diode	UDZS20(B)
D 653	(B,154,140) Diode	UDZS20(B)
D 654	(B,148,136) Diode	UDZS20(B)
D 655	(B,148,140) Diode	UDZS20(B)
D 656	(B,152,136) Diode	UDZS20(B)
D 657	(B,152,140) Diode	UDZS20(B)

Circuit Symbol and No.			Part No.
D 658	(B,146,136)	Diode	UDZS20(B)
D 659	(B,146,140)	Diode	UDZS20(B)
D 660	(B,165,127)	Diode	HZU8R2(B1)
D 801	(B,55,38)	Diode	RB400D
D 802	(B,69,65)	Diode	RB400D
D 803	(B,69,68)	Diode	RB400D
D 806	(A,71,63)	Diode	RB060L-40
D 807	(A,71,68)	Diode	RB060L-40
D 810	(A,47,27)	Diode	RB060L-40
L 1	(B,127,25)	Inductor	CTF1558
L 2	(B,142,26)	Inductor	CTF1558
L 3	(A,154,25)	Inductor	CTF1410
L 5	(A,135,41)	Inductor	CTF1556
L 6	(A,123,42)	Inductor	CTF1295
L 7	(B,157,63)	Inductor	CTF1558
L 8	(A,144,76)	Inductor	CTF1556
L 9	(B,40,49)	Inductor	CTF1453
L 10	(A,39,54)	Inductor	CTF1463
L 11	(A,128,88)	Inductor	CTF1306
L 101	(A,128,24)	Inductor	CTF1557
L 102	(A,129,20)	Inductor	CTF1557
L 103	(A,135,36)	Inductor	CTF1557
L 104	(A,144,35)	Inductor	CTF1557
L 105	(A,152,35)	Inductor	CTF1557
L 106	(A,160,35)	Inductor	CTF1557
L 107	(A,159,42)	Inductor	CTF1557
L 108	(A,159,50)	Inductor	CTF1557
L 109	(A,159,59)	Inductor	CTF1557
L 110	(B,102,46)	Inductor	CTF1556
L 111	(B,102,31)	Inductor	CTF1556
L 112	(B,103,63)	Inductor	CTF1556
L 113	(B,105,68)	Inductor	CTF1557
L 114	(B,105,63)	Inductor	CTF1557
L 201	(A,122,37)	Inductor	CTF1556
L 203	(A,82,18)	Inductor	CTF1556
L 204	(A,101,53)	Inductor	CTF1488
L 205	(A,119,29)	Inductor	CTF1556
L 206	(A,85,53)	Inductor	CTF1556
L 207	(A,91,51)	Inductor	CTF1379
L 301	(A,137,27)	Inductor	CTF1557
L 302	(A,140,21)	Inductor	CTF1557
L 305	(A,98,62)	Inductor	CTF1556
L 312	(A,117,60)	Inductor	CTF1410
L 552	(A,38,138)	Inductor	CTF1334
L 553	(A,19,93)	Inductor	CTF1334
L 554	(A,19,95)	Inductor	CTF1334
L 555	(A,21,96)	Inductor	CTF1334
L 556	(A,21,98)	Inductor	CTF1463
L 557	(A,18,100)	Inductor	CTF1463
L 558	(A,21,103)	Inductor	CTF1463
L 559	(B,18,126)	Inductor	CTF1334
L 601	(A,117,90)	Inductor	CTF1334
L 602	(A,116,93)	Inductor	CTF1306
L 603	(A,116,90)	Inductor	CTF1306
L 604	(A,113,93)	Inductor	CTF1334
L 605	(A,114,90)	Inductor	CTF1334
L 606	(A,112,88)	Inductor	CTF1378
L 607	(A,110,88)	Inductor	CTF1378
L 608	(A,109,88)	Inductor	CTF1378
L 609	(A,105,88)	Inductor	CTF1378

Circuit Symbol and No.			Part No.
L 610	(A,126,91)	Inductor	CTF1306
L 611	(A,128,91)	Inductor	CTF1306
L 612	(A,126,88)	Inductor	CTF1384
L 613	(A,125,91)	Inductor	CTF1387
L 614	(A,125,88)	Inductor	CTF1334
L 615	(A,129,94)	Inductor	CTF1334
L 616	(A,96,79)	Inductor	CTF1306
L 617	(A,123,88)	Inductor	CTF1306
L 618	(A,123,91)	Inductor	CTF1306
L 619	(A,122,89)	Inductor	CTF1334
L 620	(A,120,92)	Inductor	CTF1334
L 621	(A,119,92)	Inductor	CTF1334
L 622	(A,119,89)	Inductor	CTF1334
L 623	(A,122,92)	Inductor	CTF1306
L 624	(A,103,88)	Inductor	CTF1334
L 625	(A,117,93)	Inductor	CTF1306
L 626	(A,130,88)	Inductor	CTF1306
L 628	(A,31,17)	Inductor	CTF1306
L 629	(A,28,15)	Inductor	CTF1306
L 630	(A,31,15)	Inductor	CTF1306
L 631	(A,28,22)	Inductor	CTF1334
L 632	(A,119,113)	Inductor	CTF1334
L 633	(A,29,20)	Inductor	CTF1334
L 634	(A,111,5)	Inductor	CTF1334
L 635	(A,25,15)	Inductor	CTF1306
L 636	(A,28,17)	Inductor	CTF1378
L 637	(A,112,91)	Inductor	CTF1306
L 638	(A,29,13)	Inductor	CTF1306
L 651	(A,148,116)	Inductor	CTF1410
L 653	(B,154,125)	Inductor	CTF1334
L 654	(B,149,125)	Inductor	CTF1334
L 655	(B,152,125)	Inductor	CTF1334
L 656	(B,147,125)	Inductor	CTF1334
L 657	(A,151,126)	Inductor	CTF1463
L 701	(A,72,13)	Inductor	CTF1306
L 702	(A,71,14)	Inductor	CTF1306
L 703	(A,69,14)	Inductor	CTF1306
L 704	(A,68,14)	Inductor	CTF1334
L 705	(A,66,14)	Inductor	CTF1334
L 706	(A,65,14)	Inductor	CTF1384
L 707	(A,64,10)	Inductor	CTF1357
L 708	(A,74,103)	Inductor	CTF1306
L 709	(A,76,103)	Inductor	CTF1306
L 710	(A,77,103)	Inductor	CTF1306
L 711	(A,79,103)	Inductor	CTF1306
L 712	(A,80,103)	Inductor	CTF1306
L 713	(A,82,103)	Inductor	CTF1306
L 714	(A,83,103)	Inductor	CTF1306
L 715	(A,80,101)	Inductor	CTF1306
L 716	(A,90,103)	Inductor	CTF1629
L 717	(A,89,100)	Inductor	CTF1384
L 751	(A,44,103)	Inductor	CTF1334
L 752	(B,46,116)	Inductor	CTF1334
L 753	(B,32,101)	Inductor	LCTAW680J3225
L 754	(A,47,108)	Inductor	CTF1334
L 755	(B,36,117)	Inductor	CTF1357
L 756	(A,40,109)	Inductor	CTF1357
L 801	(A,134,90)	Inductor	CTF1463
L 802	(B,106,89)	Inductor	CTF1463
L 803	(A,68,91)	Inductor	CTF1306

Circuit Symbol and No.			Part No.
L 804	(A,62,87)	Inductor	CTF1463
L 805	(A,72,76)	Inductor	CTH1257
L 807	(A,48,35)	Inductor	CTH1254
L 808	(A,64,34)	Inductor	CTH1257
L 809	(A,59,73)	Inductor	CTH1253
L 810	(A,71,56)	Inductor	CTH1257
L 811	(A,60,80)	Inductor	CTF1453
L 814	(B,73,89)	Inductor	CTF1453
L 815	(A,25,35)	Inductor	CTH1262
TH601	(A,124,117)	Thermistor	CCX1056
X 1	(A,139,80)	Radiator 30.000MHz	CSS1633
X 2	(B,130,69)	Radiator 33.000MHz	CSS1634
X 3	(B,157,57)	Radiator 33.86MHz	CSS1551
X 202	(A,122,29)	Radiator 14.31818MHz	CSS1632
⚠FU651	(A,154,126)	Fuse 1A	CEK1280
⚠FU802	(A,80,55)	Fuse 2.5A	CEK1285
⚠FU803	(A,81,79)	Fuse 1A	CEK1280
GY551	(A,48,138)	Sensor	CSX1054
GY554	(A,24,138)	Sensor	CSX1089

RESISTORS

Circuit Symbol and No.		Part No.
R 1	(B,126,42)	RS1/16S0R0J
R 3	(B,126,45)	RS1/16S0R0J
R 6	(A,117,71)	RS1/16S473J
R 7	(A,152,56)	RS1/16S220J
R 8	(A,116,78)	RS1/16S473J
R 10	(A,148,78)	RS1/16S104J
R 11	(A,151,78)	RAB4C473J
R 12	(A,141,75)	RS1/16S105J
R 13	(A,139,75)	RS1/16S151J
R 14	(B,143,42)	RS1/16S0R0J
R 16	(B,143,45)	RS1/16S0R0J
R 19	(A,117,76)	RS1/16S473J
R 20	(A,131,77)	RS1/16S101J
R 21	(A,134,74)	RS1/16S101J
R 22	(A,132,77)	RS1/16S101J
R 23	(B,133,68)	RS1/16S105J
R 24	(B,133,70)	RS1/16S151J
R 25	(A,130,77)	RS1/16S101J
R 26	(A,134,77)	RS1/16S101J
R 27	(A,130,74)	RS1/16S101J
R 28	(A,133,74)	RS1/16S101J
R 29	(A,129,74)	RS1/16S101J
R 30	(A,128,74)	RS1/16S101J
R 31	(A,128,77)	RS1/16S101J
R 32	(B,133,61)	RS1/16S473J
R 33	(A,127,77)	RS1/16S473J
R 34	(B,154,58)	RS1/16S105J
R 35	(A,123,57)	RS1/16S104J
R 36	(A,122,67)	RS1/16S101J
R 37	(A,122,68)	RS1/16S101J
R 38	(A,122,70)	RS1/16S101J
R 39	(A,122,71)	RS1/16S101J
R 40	(A,121,54)	RS1/16S470J
R 45	(B,126,64)	RS1/16S104J
R 46	(B,126,69)	RS1/16S104J
R 47	(B,156,55)	RS1/16S104J
R 48	(B,155,73)	RS1/16S104J
R 49	(B,156,73)	RS1/16S104J
R 50	(B,158,73)	RS1/16S104J
R 51	(A,49,66)	RS1/16SS0R0J
R 52	(A,49,62)	RS1/16SS101J
R 53	(A,49,64)	RS1/16SS101J
R 54	(A,73,49)	RS1/16SS101J
R 55	(A,72,49)	RS1/16SS101J
R 56	(A,71,49)	RS1/16SS101J
R 57	(A,70,49)	RS1/16SS101J
R 58	(A,69,49)	RS1/16SS101J
R 59	(A,68,49)	RS1/16SS101J
R 60	(A,67,49)	RS1/16SS101J
R 61	(A,66,49)	RS1/16SS101J
R 62	(A,65,49)	RS1/16SS101J
R 63	(A,64,49)	RS1/16SS101J
R 64	(A,63,49)	RS1/16SS101J
R 65	(A,62,49)	RS1/16SS101J
R 66	(A,61,49)	RS1/16SS101J
R 67	(A,60,49)	RS1/16SS101J
R 68	(A,59,49)	RS1/16SS101J
R 69	(A,58,49)	RS1/16SS101J
R 70	(A,56,49)	RS1/16SS101J
R 71	(B,80,41)	RS1/16SS101J
R 72	(B,80,45)	RS1/16SS101J
R 73	(B,80,38)	RS1/16SS101J
R 74	(B,80,39)	RS1/16SS101J
R 75	(B,80,37)	RS1/16SS101J
R 76	(B,80,36)	RS1/16SS101J
R 77	(B,80,33)	RS1/16SS101J
R 78	(B,80,34)	RS1/16SS101J
R 79	(A,57,49)	RS1/16SS101J
R 80	(A,55,49)	RS1/16SS101J
R 81	(A,54,49)	RS1/16SS101J
R 84	(B,80,44)	RS1/16SS562J
R 85	(B,80,35)	RS1/16SS103J
R 87	(B,156,71)	RS1/16S104J
R 88	(B,128,57)	RS1/16S104J
R 89	(B,132,54)	RS1/16S0R0J
R 90	(B,132,53)	RS1/16S0R0J
R 93	(B,130,52)	RS1/16S153J
R 94	(B,134,52)	RS1/16S153J
R 95	(B,130,57)	RS1/16S153J
R 96	(B,130,56)	RS1/16S153J
R 97	(A,118,64)	RS1/16S473J
R 98	(A,155,69)	RS1/16S473J
R 101	(B,102,44)	RS1/16S473J
R 102	(B,102,29)	RS1/16S473J
R 103	(B,101,67)	RS1/16S473J
R 104	(A,131,31)	RS1/16S220J
R 151	(B,126,41)	RS1/16S0R0J
R 152	(B,158,43)	RS1/16S0R0J
R 153	(B,142,52)	RS1/16S471J
R 154	(A,116,64)	RS1/16S473J
R 155	(A,113,64)	RS1/16S473J
R 156	(A,105,74)	RS1/16S473J
R 158	(A,118,60)	RS1/16S473J
R 159	(B,126,65)	RS1/16S473J
R 160	(A,119,69)	RS1/16S473J
R 161	(A,105,77)	RS1/16S473J
R 162	(B,131,65)	RS1/16S473J
R 163	(A,122,66)	RS1/16S560J

Circuit Symbol and No.		Part No.
R 164	(A,112,74)	RS1/16S473J
R 165	(A,122,78)	RS1/16S473J
R 166	(A,104,77)	RS1/16S473J
R 167	(A,117,72)	RS1/16S473J
R 170	(A,107,74)	RS1/16S473J
R 171	(A,109,74)	RS1/16S473J
R 172	(A,108,74)	RS1/16S473J
R 174	(A,122,75)	RS1/16S473J
R 175	(A,122,76)	RS1/16S473J
R 176	(A,122,65)	RS1/16S0R0J
R 177	(A,117,74)	RS1/16S473J
R 178	(A,117,75)	RS1/16S473J
R 179	(A,110,71)	RS1/16S473J
R 180	(A,145,74)	RS1/16S101J
R 181	(A,114,64)	RS1/16S473J
R 183	(A,114,71)	RS1/16S473J
R 184	(A,114,67)	RS1/16S473J
R 185	(A,112,71)	RS1/16S473J
R 186	(A,113,67)	RS1/16S473J
R 187	(A,112,67)	RS1/16S473J
R 188	(A,107,77)	RS1/16S473J
R 189	(A,108,77)	RS1/16S473J
R 190	(A,109,77)	RS1/16S473J
R 191	(B,126,72)	RS1/16S473J
R 192	(A,113,71)	RS1/16S473J
R 193	(A,123,74)	RS1/16S473J
R 194	(A,146,76)	RS1/16S390J
R 196	(A,112,77)	RS1/16S473J
R 198	(A,124,72)	RS1/16SS473J
R 199	(A,117,81)	RS1/16SS473J
R 201	(A,120,49)	RN1/16SE1502D
R 202	(A,120,48)	RN1/16SE1202D
R 210	(A,98,51)	RS1/16S104J
R 211	(A,97,51)	RS1/16S104J
R 212	(A,90,51)	RS1/16S104J
R 213	(A,88,51)	RS1/16S104J
R 217	(A,121,44)	RS1/16S272J
R 220	(A,122,16)	RS1/16S223J
R 221	(A,121,34)	RS1/16S105J
R 222	(A,122,25)	RS1/16S151J
R 224	(A,79,24)	RS1/16S0R0J
R 225	(A,117,17)	RS1/16S104J
R 226	(A,118,17)	RS1/16S104J
R 227	(A,79,27)	RS1/16S104J
R 228	(A,80,27)	RS1/16S104J
R 229	(B,115,25)	RS1/16S560J
R 230	(A,80,22)	RS1/16S104J
R 232	(A,82,22)	RS1/16S104J
R 237	(B,112,25)	RS1/16S104J
R 238	(B,114,25)	RS1/16S330J
R 240	(A,114,16)	RS1/16S104J
R 301	(A,135,27)	RS1/16S123J
R 302	(A,135,30)	RS1/16S103J
R 303	(A,137,25)	RS1/16S473J
R 320	(A,106,65)	RS1/16S103J
R 328	(A,105,67)	RS1/16S101J
R 329	(A,110,62)	RS1/16SS821J
R 330	(A,110,58)	RS1/16SS221J
R 331	(A,110,60)	RS1/16SS221J
R 332	(A,110,59)	RS1/16SS472J

Circuit Symbol and No.		Part No.
R 349	(B,156,52)	RS1/16S473J
R 350	(B,147,51)	RS1/16S473J
R 356	(A,91,74)	RS1/16S0R0J
R 360	(B,97,69)	RS1/16SS473J
R 361	(B,97,56)	RS1/16SS473J
R 362	(B,97,68)	RS1/16SS473J
R 363	(B,97,57)	RS1/16SS473J
R 364	(B,97,60)	RS1/16SS473J
R 365	(B,97,59)	RS1/16SS473J
R 366	(B,97,58)	RS1/16SS473J
R 367	(B,99,57)	RS1/16SS473J
R 368	(B,99,59)	RS1/16SS473J
R 369	(B,97,67)	RS1/16SS473J
R 551	(A,27,126)	RS1/16S103J
R 552	(A,23,126)	RS1/10S103J
R 553	(A,23,128)	RN1/16SE1001D
R 554	(A,22,130)	RN1/16SE1101D
R 555	(A,19,130)	RN1/16SE1001D
R 557	(A,39,134)	RS1/10S105J
R 558	(A,39,132)	RS1/10S151J
R 559	(B,18,72)	RS1/16S104J
R 560	(A,19,92)	RS1/16S104J
R 561	(B,20,72)	RS1/16S473J
R 562	(B,19,70)	RS1/16S563J
R 563	(B,19,74)	RS1/16S513J
R 564	(B,6,71)	RS1/16S104J
R 565	(A,25,59)	RS1/16S102J
R 566	(A,23,59)	RS1/16S102J
R 567	(A,18,106)	RS1/16S0R0J
R 568	(A,22,62)	RS1/16S513J
R 569	(A,24,63)	RS1/16S513J
R 570	(A,24,61)	RS1/16S564J
R 571	(B,7,74)	RS1/16S0R0J
R 572	(A,24,56)	RS1/16S822J
R 573	(A,23,58)	RS1/16S202J
R 574	(B,11,35)	RS1/16S203J
R 576	(B,8,35)	RS1/16S333J
R 577	(A,58,117)	RS1/16S0R0J
R 578	(A,22,93)	RS1/16S0R0J
R 579	(A,22,95)	RS1/16S0R0J
R 601	(A,107,88)	RS1/16S0R0J
R 602	(A,121,117)	RS1/16S1803D
R 603	(A,126,114)	RS1/16SS1603F
R 604	(A,126,117)	RS1/16S1002F
R 605	(A,115,96)	RS1/16S101J
R 606	(A,127,93)	RS1/16S470J
R 607	(A,107,8)	RS1/16S473J
R 608	(A,106,6)	RS1/16S473J
R 609	(A,103,5)	RS1/16S473J
R 610	(A,100,5)	RS1/16S473J
R 611	(A,95,8)	RS1/16S472J
R 612	(A,125,94)	RS1/16S101J
R 613	(A,123,94)	RS1/16S101J
R 614	(A,33,19)	RS1/16SS0R0J
R 615	(A,34,19)	RS1/16SS0R0J
R 616	(A,129,90)	RS1/16SS101J
R 617	(A,30,17)	RS1/16S101J
R 618	(A,33,24)	RS1/16SS101J
R 620	(A,50,18)	RS1/16SS0R0J
R 622	(A,50,15)	RS1/16SS0R0J

Circuit Symbol and No.		Part No.
R 623	(A,48,11)	RS1/16SS0R0J
R 624	(A,118,10)	RS1/16S0R0J
R 625	(A,32,14)	RS1/16SS0R0J
R 626	(A,117,7)	RS1/16SS0R0J
R 651	(B,151,128)	RS1/16S681J
R 652	(B,164,119)	RS1/16S471J
R 653	(B,164,118)	RS1/16S471J
R 654	(B,154,128)	RS1/16S681J
R 655	(B,149,128)	RS1/16S681J
R 656	(B,152,128)	RS1/16S681J
R 657	(B,147,128)	RS1/16S681J
R 701	(A,72,17)	RS1/16S0R0J
R 702	(A,71,17)	RS1/16S0R0J
R 703	(A,63,14)	RS1/16S0R0J
R 704	(A,61,7)	RS1/16S0R0J
R 705	(A,61,8)	RS1/16S0R0J
R 706	(A,61,10)	RS1/16S0R0J
R 707	(A,64,8)	RS1/16S0R0J
R 708	(B,72,10)	RS1/16S0R0J
R 709	(A,67,12)	RS1/16S0R0J
R 710	(A,92,103)	RS1/16S101J
R 711	(A,80,99)	RS1/16S101J
R 712	(A,83,101)	RS1/16S101J
R 715	(B,77,9)	RS1/16S0R0J
R 717	(B,83,6)	RS1/16S0R0J
R 751	(B,51,106)	RS1/16SS101J
R 752	(B,51,108)	RS1/16SS101J
R 753	(B,51,110)	RS1/16SS101J
R 754	(B,51,104)	RS1/16S222J
R 755	(B,50,97)	RS1/16S222J
R 756	(B,38,118)	RS1/16S101J
R 759	(B,35,110)	RS1/16S242J
R 760	(B,35,107)	RS1/16S242J
R 761	(B,35,105)	RS1/16S222J
R 762	(B,35,109)	RS1/16S242J
R 763	(B,34,114)	RS1/16SS0R0J
R 764	(B,32,109)	RS1/16SS0R0J
R 765	(B,32,105)	RS1/16SS0R0J
R 766	(B,30,97)	RS1/16SS0R0J
R 767	(B,31,96)	RS1/16S222J
R 768	(B,31,108)	RS1/16S182J
R 769	(B,31,112)	RS1/16S182J
R 770	(B,31,116)	RS1/16S182J
R 775	(A,37,109)	RS1/16S0R0J
R 780	(B,26,117)	RS1/16S471J
R 782	(B,25,110)	RS1/16S471J
R 783	(B,25,106)	RS1/16S471J
R 784	(B,26,96)	RS1/16S471J
R 801	(A,84,61)	RS1/16S103J
R 802	(A,88,66)	RS1/10S360J
R 803	(A,88,68)	RS1/10S360J
R 804	(B,68,51)	RS1/16S6803D
R 807	(B,44,47)	RS1/8S0R0J
R 808	(B,59,38)	RS1/16S0R0J
R 809	(B,41,46)	RS1/10S102J
R 810	(B,62,38)	RS1/16S101J
R 811	(B,62,37)	RS1/16S1600D
R 812	(B,65,37)	RS1/16S5601D
R 813	(B,67,38)	RS1/16S1001D
R 814	(B,66,35)	RS1/16S331J

Circuit Symbol and No.		Part No.
R 815	(B,68,30)	RS1/16S1003D
R 816	(B,66,30)	RS1/16S6803D
R 817	(B,61,54)	RS1/16S0R0J
R 818	(B,61,53)	RS1/16S473J
R 819	(B,61,56)	RS1/16S3300D
R 820	(B,58,56)	RS1/16S1002D
R 821	(B,56,56)	RS1/16S5601D
R 822	(B,58,57)	RS1/16S331J
R 823	(B,57,59)	RS1/16S152J
R 824	(B,57,61)	RS1/16S104J
R 825	(B,57,66)	RS1/16S1003D
R 826	(B,64,76)	RS1/16S0R0J
R 827	(B,62,77)	RS1/16S6800D
R 828	(B,59,77)	RS1/16S1002D
R 829	(B,56,76)	RS1/16S3301D
R 830	(B,59,76)	RS1/16S331J
R 831	(B,57,74)	RS1/16S332J
R 832	(B,57,71)	RS1/16S104J
R 851	(B,53,30)	RS1/16S184J
R 853	(B,62,79)	RS1/16S100J
R 854	(B,73,65)	RS1/10S150J
R 855	(B,73,69)	RS1/10S150J
R 859	(B,57,26)	RS1/16S100J
R 860	(B,51,35)	RS1/10S100J
R 861	(B,61,59)	RS1/16S224J
R 862	(B,61,73)	RS1/16S224J
R 867	(B,15,24)	RS1/8S680J
R 868	(B,18,11)	RS1/8S151J
R 870	(B,21,25)	RS1/16S103J
R 871	(B,67,25)	RS1/16S473J
R 873	(B,66,25)	RS1/16S0R0J
R 881	(B,55,77)	RS1/16S274J
R 890	(A,168,106)	RS1/16S0R0J
R 891	(B,162,106)	RS1/10S472J
R 892	(B,159,107)	RS1/16SS223J
R 893	(B,154,105)	RS1/16S330J
R 894	(A,137,140)	RS1/8S0R0J
R 895	(A,127,131)	RS1/10S0R0J
R 896	(A,124,131)	RS1/10S0R0J
R 897	(A,122,131)	RS1/10S0R0J
R 898	(A,120,131)	RS1/10S0R0J
R 900	(B,10,24)	RS1/8S151J
R 901	(B,13,11)	RS1/8S151J
R 902	(B,15,11)	RS1/8S151J
R 903	(A,131,124)	RS1/16S0R0J

CAPACITORS

C 1	(B,128,27)	CKSRYB104K16
C 2	(B,127,31)	CKSRYB104K16
C 3	(B,127,33)	CKSRYB104K16
C 4	(B,127,38)	CKSRYB104K16
C 5	(B,127,50)	CKSRYB104K16
C 6	(A,148,45)	CKSRYB104K16
C 7	(A,152,53)	CKSRYB104K16
C 8	(A,152,58)	CKSRYB104K16
C 9	(A,152,61)	CKSRYB104K16
C 10	(A,152,64)	CKSRYB104K16
C 11	(A,152,69)	CKSRYB104K16
C 12	(B,131,26) 10É F	CCG1192

Circuit Symbol and No.			Part No.
C 13	(B,142,34)		CKSRYB104K16
C 14	(B,142,37)		CKSRYB104K16
C 15	(A,143,44)		CKSRYB104K16
C 16	(A,141,44)		CKSRYB104K16
C 17	(A,143,75)		CKSRYB104K16
C 18	(A,141,77)		CCSRCH100D50
C 19	(A,138,77)		CCSRCH100D50
C 20	(B,145,27)		CKSRYB104K16
C 21	(B,144,31)		CKSRYB104K16
C 22	(B,144,33)		CKSRYB104K16
C 23	(B,144,38)		CKSRYB104K16
C 24	(B,143,49)		CKSRYB104K16
C 25	(A,136,45)		CKSRYB104K16
C 26	(A,137,74)		CKSRYB104K16
C 27	(B,148,26)	10µF	CCG1192
C 28	(B,153,24)		CKSRYB104K16
C 29	(B,158,36)		CKSRYB104K16
C 30	(A,154,27)		CKSRYF104Z25
C 31	(B,128,67)		CCSRCH9R0D50
C 32	(B,128,71)		CCSRCH9R0D50
C 33	(A,132,45)		CKSRYB104K16
C 35	(A,132,74)		CKSRYB104K16
C 36	(A,126,74)		CKSRYB104K16
C 38	(A,131,41)	10µF	CCG1171
C 39	(A,123,50)		CKSRYB104K16
C 40	(A,122,51)		CKSRYB104K16
C 41	(A,123,59)		CKSRYB104K16
C 42	(B,136,53)		CKSRYB104K16
C 43	(A,48,54)		CKSRYB104K16
C 44	(B,133,65)		CKSRYB104K16
C 46	(A,49,73)		CKSRYB104K16
C 47	(B,141,74)		CKSRYB104K16
C 49	(B,139,53)		CKSRYB104K16
C 51	(A,144,44)		CKSRYB224K10
C 54	(B,80,42)		CCSRCH121J50
C 55	(B,144,53)		CKSRYB104K16
C 56	(A,39,51)		CKSRYB104K16
C 57	(B,147,53)		CKSRYB104K16
C 58	(A,48,51)		CKSRYB104K16
C 60	(B,149,74)		CKSRYB104K16
C 63	(B,154,55)		CKSRYB104K16
C 64	(B,154,61)		CKSRYB104K16
C 66	(B,154,63)		CKSRYB104K16
C 67	(B,156,63)	10µF	CCG1192
C 68	(A,126,44)	22µF	CCG1178
C 69	(A,126,42)	22µF	CCG1178
C 70	(A,126,38)	22µF	CCG1178
C 71	(B,125,69)		CKSRYF103Z50
C 72	(B,159,60)		CKSRYF103Z50
C 73	(B,157,60)		CKSRYF104Z25
C 74	(B,154,70)		CKSRYF104Z25
C 75	(A,152,26)		CKSRYF104Z25
C 76	(B,127,36)		CKSRYF103Z50
C 77	(B,135,26)		CKSRYF103Z50
C 78	(B,142,30)		CKSRYF103Z50
C 79	(B,158,38)		CKSRYB103K50
C 80	(B,151,26)		CKSRYB103K50
C 81	(B,143,48)		CKSRYB224K10
C 82	(B,158,31)		CKSRYB103K50
C 96	(B,160,31)		CKSRYB224K10

Circuit Symbol and No.			Part No.
C 97	(B,160,36)		CKSRYB224K10
C 98	(B,160,38)		CKSRYB224K10
C 101	(A,128,27)		CKSRYB104K16
C 102	(A,131,20)		CKSRYB104K16
C 103	(A,135,34)		CKSRYB104K16
C 104	(A,144,38)		CKSRYB104K16
C 105	(A,152,38)		CKSRYB104K16
C 106	(A,160,38)		CKSRYB104K16
C 107	(A,156,42)		CKSRYB104K16
C 108	(A,156,50)		CKSRYB104K16
C 109	(A,156,59)		CKSRYB104K16
C 110	(B,102,51)	10µF	CCG1171
C 111	(B,102,48)		CKSRYB104K16
C 112	(B,102,43)		CKSRYF224Z16
C 113	(B,102,36)	10µF	CCG1171
C 114	(B,102,33)		CKSRYB104K16
C 115	(B,102,28)		CKSRYF224Z16
C 116	(B,115,73)		CKSRYF104Z25
C 117	(B,103,60)	10µF	CCG1171
C 118	(B,103,59)		CKSRYB104K16
C 119	(B,115,58)		CKSRYF104Z25
C 120	(B,105,71)		CKSRYF104Z25
C 121	(B,105,66)		CKSRYF104Z25
C 122	(B,100,47)		CKSRYF104Z25
C 123	(B,102,63)		CKSRYF103Z50
C 124	(B,126,49)		CCSRCH101J50
C 125	(A,162,42)		CKSRYF104Z25
C 126	(A,162,59)		CKSRYF104Z25
C 201	(A,120,46)		CKSRYB104K16
C 202	(A,115,51)		CKSRYB104K16
C 203	(A,113,51)		CKSRYB104K16
C 204	(A,118,46)		CKSRYB104K16
C 205	(A,107,51)		CKSRYB104K16
C 206	(A,102,50)		CKSRYB104K16
C 207	(A,96,51)		CKSRYB104K16
C 208	(A,92,51)		CKSRYB104K16
C 209	(A,83,46)		CKSRYB104K16
C 211	(A,118,43)		CKSRYB104K16
C 213	(A,118,41)		CKSRYB104K16
C 214	(A,119,41)		CKSRYB104K16
C 215	(A,83,44)		CKSRYB104K16
C 216	(A,83,41)		CKSRYB104K16
C 217	(A,83,39)		CKSRYB104K16
C 220	(A,121,41)	10µF	CCG1171
C 221	(A,118,38)		CKSRYB104K16
C 222	(A,118,35)		CKSRYB104K16
C 223	(A,120,17)		CKSRYB224K10
C 224	(A,118,33)		CKSRYB104K16
C 225	(A,119,38)		CKSRYB104K16
C 227	(A,83,38)		CKSRYB104K16
C 228	(A,83,33)		CKSRYB104K16
C 230	(A,123,34)		CCSRCH150J50
C 231	(A,123,25)		CCSRCH120J50
C 232	(A,118,30)		CKSRYB104K16
C 233	(A,118,27)		CKSRYB104K16
C 234	(A,83,29)		CKSRYB104K16
C 235	(A,84,27)		CKSRYB104K16
C 237	(A,118,24)		CKSRYB104K16
C 238	(A,119,22)		CKSRYB104K16
C 239	(A,84,26)		CKSRYB104K16

Circuit Symbol and No.		Part No.
C 240	(A,84,23)	CKSRYB104K16
C 241	(A,84,21)	CKSRYB104K16
C 242	(A,112,17)	CKSRYB104K16
C 243	(A,108,17)	CKSRYB104K16
C 244	(A,105,17)	CKSRYB104K16
C 245	(A,102,17)	CKSRYB104K16
C 246	(A,98,17)	CKSRYB104K16
C 247	(A,94,17)	CKSRYB104K16
C 248	(A,89,17)	CKSRYB104K16
C 249	(A,84,17) 10µF	CCG1171
C 250	(A,104,52) 10µF	CCG1171
C 251	(A,120,34) 10µF	CCG1171
C 252	(A,85,51) 10µF	CCG1171
C 253	(A,121,23)	CKSRYF104Z25
C 255	(A,83,42)	CKSRYB103K50
C 256	(A,83,36)	CKSRYB103K50
C 257	(A,83,35)	CKSRYB103K50
C 258	(A,83,31)	CKSRYB103K50
C 259	(A,83,30)	CKSRYB103K50
C 260	(A,84,24)	CKSRYB103K50
C 261	(A,80,17)	CKSRYB103K50
C 262	(A,79,17)	CKSRYB103K50
C 301	(A,137,30)	CKSRYF104Z25
C 302	(A,144,30)	CKSRYB334K10
C 303	(A,138,21)	CKSRYF104Z25
C 306	(A,116,57)	CKSRYF104Z25
C 323	(A,103,65) 10µF	CCG1171
C 328	(A,100,59)	CKSRYB104K16
C 329	(A,98,59) 10µF	CCG1171
C 341	(A,156,27)	CCSRCH101J50
C 342	(A,136,23)	CKSRYF104Z25
C 344	(B,142,20)	CKSRYF103Z50
C 345	(B,140,20)	CKSRYF104Z25
C 346	(B,126,20)	CKSRYF103Z50
C 347	(B,115,19)	CKSRYF103Z50
C 348	(B,114,17)	CKSRYF104Z25
C 349	(B,92,16)	CKSRYF103Z50
C 356	(A,109,64)	CKSRYB102K50
C 357	(A,93,75)	CKSRYB102K50
C 370	(A,89,79)	CKSRYB102K50
C 552	(A,29,129)	CKSRYB104K16
C 553	(A,41,137)	CKSRYB105K10
C 554	(A,38,136)	CKSRYB103K50
C 555	(A,35,134)	CKSYB106K6R3
C 556	(B,9,76)	CKSRYF104Z25
C 557	(B,8,71)	CKSRYB102K50
C 559	(A,18,97)	CKSRYF104Z25
C 560	(A,20,100)	CKSRYF104Z25
C 561	(A,18,103)	CKSRYF104Z25
C 562	(A,19,53)	CKSRYB104K16
C 563	(A,20,51)	CKSRYB104K25
C 564	(B,17,35)	CKSRYB103K50
C 566	(B,15,35)	CKSRYB823K16
C 567	(B,22,128)	CCSRCH102J50
C 568	(B,26,128)	CKSRYB104K16
C 602	(A,118,115)	CKSSYF104Z16
C 603	(A,120,115)	CKSSYF104Z16
C 604	(A,119,117)	CKSSYB104K10
C 605	(A,127,95)	CCSRCH101J50
C 606	(A,112,96)	CCSRCH471J50

Circuit Symbol and No.		Part No.
C 607	(A,114,93)	CCSRCH101J50
C 608	(A,97,8)	CKSRYB103K50
C 609	(A,111,7)	CKSRYF104Z25
C 610	(A,131,94)	CCSRCH101J50
C 611	(A,130,91)	CCSRCH471J50
C 651	(A,148,120)	CKSQYB475K6R3
C 652	(A,149,118)	CKSSYB103K16
C 653	(A,149,116)	CKSRYB105K10
C 654	(A,152,115)	CKSRYB105K10
C 655	(A,155,115)	CKSRYB105K10
C 656	(A,153,129)	CKSSYB102K50
C 657	(A,150,123)	CKSRYB105K10
C 658	(A,148,123)	CKSRYB105K10
C 659	(A,152,129)	CKSSYB102K50
C 665	(B,163,127)	CKSRYB104K16
C 666	(A,148,126)	CKSQYF104Z50
C 667	(A,147,129)	CKSQYF104Z50
C 701	(B,83,10)	CKSRYF104Z25
C 702	(B,82,9)	CKSRYF104Z25
C 705	(A,70,12)	CKSRYF104Z50
C 707	(A,89,103)	CKSRYF104Z25
C 751	(A,47,104)	CKSRYB104K16
C 752	(B,48,110)	CKSRYB104K16
C 753	(B,48,108)	CKSRYB104K16
C 754	(B,48,106)	CKSRYB104K16
C 755	(B,48,99)	CCSRCH470J50
C 756	(B,48,104)	CCSRCH5R0C50
C 758	(A,45,97)	CEVQW470M16
C 759	(B,49,96)	CKSRYB105K6R3
C 760	(B,44,115)	CKSQYB225K10
C 761	(B,42,116)	CKSSYB103K16
C 762	(B,35,100)	CCSRCH220J50
C 766	(B,35,103)	CKSRYB105K6R3
C 767	(A,38,104)	CEVQW470M16
C 772	(A,45,110)	CKSRYB104K16
C 774	(B,32,118)	CKSQYB475K6R3
C 775	(B,31,106)	CCSRCH220J50
C 776	(B,31,110)	CCSRCH220J50
C 777	(B,31,115)	CCSRCH220J50
C 801	(A,135,88)	CKSRYF104Z25
C 802	(A,134,88)	CKSRYB103K50
C 803	(B,108,89)	CKSRYF104Z25
C 804	(B,107,87)	CKSRYB103K50
C 805	(A,91,66)	CKSRYB103K50
C 806	(A,96,69)	CEVW101M16
C 807	(B,93,90)	CKSRYB103K50
C 808	(A,90,90)	CEVW220M6R3
C 809	(B,97,99) 10µF	CCG1171
C 810	(B,76,91)	CKSRYF104Z25
C 811	(A,97,91)	CEVW101M6R3
C 812	(B,103,87)	CKSRYF104Z25
C 813	(A,66,91)	CKSRYB103K50
C 814	(B,76,88)	CKSRYB103K50
C 815	(A,61,90)	CKSRYF104Z25
C 816	(A,63,90)	CKSRYB103K50
C 817	(B,103,95)	CKSRYF104Z25
C 818	(B,65,38)	CKSRYB473K50
C 819	(B,66,33)	CCSRCH101J50
C 820	(B,69,34)	CKSRYB224K16
C 821	(B,65,40)	CKSRYB103K50

Circuit Symbol and No.			Part No.
C 822	(B,68,32)	15pF	CCG1215
C 823	(B,64,26)		CKSRYB105K10
C 824	(B,61,57)		CKSRYB822K50
C 825	(B,59,59)		CKSRYB152K50
C 826	(B,57,60)		CKSRYB563K16
C 827	(B,57,63)		CKSRYB103K50
C 828	(B,57,64)	15pF	CCG1215
C 829	(B,62,76)		CKSRYB822K50
C 830	(B,59,73)		CKSRYB152K50
C 831	(B,57,73)		CKSRYB563K16
C 832	(B,57,67)		CKSRYB105K10
C 833	(B,57,70)		CKSRYB103K50
C 834	(B,92,88)	10µF	CCG1171
C 835	(A,86,79)		CKSRYB104K16
C 836	(A,139,89)		CKSRYB104K16
C 837	(A,89,56)		CKSRYB104K16
C 844	(B,53,32)		CKSRYF104Z25
C 845	(B,53,26)		CKSYB475K10
C 846	(B,53,34)		CKSRYF474Z16
C 847	(B,65,80)	4.7µF	CCG1111
C 848	(B,64,60)		CKSRYF474Z16
C 849	(B,65,72)		CKSRYF474Z16
C 853	(A,56,35)	220µF/10V	CCH1409
C 854	(B,61,25)	4.7µF	CCG1111
C 855	(B,61,60)		CKSRYF104Z25
C 856	(A,60,64)	10µF	CCG1173
C 857	(B,65,52)		CKSYB475K10
C 858	(B,61,74)		CKSRYF104Z25
C 859	(A,63,64)	10µF	CCG1173
C 860	(A,63,59)	4.7µF	CCG1111
C 867	(B,45,26)	4.7µF	CCG1111
C 868	(B,49,25)	4.7µF	CCG1111
C 869	(A,57,27)	10µF	CCG1173
C 870	(A,54,27)	10µF	CCG1173
C 871	(B,45,29)	4.7µF	CCG1111
C 872	(A,60,59)	4.7µF	CCG1111
C 873	(A,80,62)	330µF/6.3V	CCH1366
C 874	(B,68,76)	4.7µF	CCG1111
C 875	(A,56,63)	10µF	CCG1173
C 876	(A,56,60)	10µF	CCG1173
C 877	(A,64,80)		CKSRYB104K25
C 878	(A,81,73)	330µF/6.3V	CCH1366
C 879	(B,68,58)	4.7µF	CCG1111
C 881	(A,11,62)		CEAT472M16(P35)
C 882	(A,11,44)		CEAT472M16(P35)
C 890	(A,166,100)		CEVW101M16
C 891	(A,150,94)		CEVW101M16
C 892	(B,159,94)		CKSRYF104Z25
C 893	(A,158,94)		CEVW101M16
C 894	(B,24,11)		CKSRYF104Z25
C 895	(A,13,18)		CEAT221M25(P35)
C 896	(B,21,27)		CKSRYF104Z25
C 897	(A,13,29)	2200µF/16V	CCH1659(P35)
C 898	(A,150,107)		CEVW101M16
C 899	(A,158,107)		CEVW101M16

B

Unit Number:CWX3141
Unit Name:GPS Unit

Circuit Symbol and No.			Part No.

MISCELLANEOUS

IC 401	(A,25,17)	IC	UPC2749T
IC 402	(B,20,28)	IC	UPB1027GS
IC 441	(A,32,30)	IC	NJM2100V
IC 461	(B,29,10)	IC	ADC12H034CIMSAS1
IC 501	(B,50,26)	IC	PD3390A
IC 502	(B,48,9)	IC	PD6519A
IC 503	(A,49,29)	IC	M5M5V216ATP-70HI
IC 504	(A,31,14)	IC	MAX6364PUT29
Q 441	(A,32,22)	Transistor	2SB1132
D 401	(B,11,28)	Diode	1SV314
D 501	(B,35,30)	Diode	RB751V40
L 401	(B,11,29)	Inductor	CTF1549
L 402	(B,26,22)	Inductor	CTF1486
L 403	(B,27,26)	Inductor	CTF1486
L 404	(A,21,23)	Inductor	LCSA3N3R1608
L 405	(B,13,24)	Inductor	LCYB22NJ1608
L 406	(B,15,20)	Inductor	LCYB22NJ1608
L 407	(A,19,32)	Inductor	CTF1410
L 408	(B,26,32)	Inductor	CTF1556
L 409	(B,18,12)	Inductor	LCYC1R0K2125
L 410	(B,26,17)	Inductor	CTF1547
L 412	(A,25,27)	Inductor	CTF1547
L 413	(A,25,26)	Inductor	CTF1547
L 414	(A,25,32)	Inductor	CTF1547
L 415	(A,26,29)	Inductor	CTF1547
L 416	(A,26,28)	Inductor	CTF1547
L 417	(B,25,20)	Inductor	CTF1547
L 418	(A,14,33)	Inductor	CTF1410
L 441	(B,32,20)	Inductor	CTF1410
L 442	(A,29,25)	Inductor	CTF1410
L 461	(A,28,9)	Inductor	CTF1410
L 462	(A,31,8)	Inductor	CTF1410
L 467	(B,33,17)	Inductor	CTF1547
L 468	(B,32,17)	Inductor	CTF1547
L 469	(A,32,11)	Inductor	CTF1410
L 501	(B,38,17)	Inductor	CTF1410
L 502	(B,36,32)	Inductor	CTF1410
L 503	(B,59,6)	Inductor	CTF1410
L 504	(A,38,33)	Inductor	CTF1410
L 531	(A,53,18)	Inductor	CTF1410
X 401	(A,14,27)	TCXO 16.368MHz	CWX2381
X 501	(A,37,26)	Radiator 32.768kHz	CSS1319
X 502	(B,36,26)	Radiator 20.00MHz	CSS1549
F 401	(A,23,23)	Filter	CTF1548

RESISTORS

R 401	(B,11,26)	RS1/16SS472J
R 402	(B,12,30)	RS1/16SS472J
R 403	(B,14,32)	RS1/16SS122J
R 404	(B,14,30)	RS1/16SS622J
R 405	(A,23,26)	RS1/16SS100J
R 406	(B,27,29)	RS1/16S271J
R 407	(B,25,18)	RS1/16S2R2J
R 441	(A,30,27)	RN1/16SC10R0D
R 442	(B,32,24)	RN1/16SE1501D
R 443	(B,31,24)	RN1/16SE2402D
R 444	(B,31,27)	RN1/16SE3302D

Circuit Symbol and No.		Part No.
R 445	(B,31,33)	RN1/16SE4702D
R 446	(B,30,33)	RN1/16SE4702D
R 447	(A,33,25)	RS1/16S432J
R 448	(B,32,30)	RN1/16SE1002D
R 449	(B,33,32)	RN1/16SE2202D
R 450	(B,31,32)	RN1/16SE3302D
R 451	(A,29,32)	RS1/16S103J
R 452	(B,33,27)	RS1/16SS102J
R 454	(B,33,26)	RS1/16SS102J
R 460	(B,22,13)	RS1/16S0R0J
R 461	(A,37,5)	RS1/16SS102J
R 462	(A,38,9)	RS1/16SS102J
R 463	(B,35,12)	RAB4CQ102J
R 464	(A,35,12)	RAB4CQ333J
R 465	(A,39,8)	RS1/16SS102J
R 470	(B,35,7)	RAB4CQ471J
R 471	(B,35,4)	RAB4CQ104J
R 477	(B,31,17)	RS1/16SS222J
R 478	(B,30,16)	RS1/16SS222J
R 479	(B,28,16)	RS1/16SS222J
R 480	(B,28,17)	RS1/16SS332J
R 481	(B,30,17)	RS1/16SS332J
R 482	(A,38,6)	RS1/16SS223J
R 483	(A,38,5)	RS1/16SS473J
R 501	(B,39,27)	RS1/16SS0R0J
R 502	(B,38,29)	RS1/16SS102J
R 503	(B,38,26)	RS1/16SS154J
R 508	(B,60,14)	RS1/16SS103J
R 509	(B,34,15)	RS1/16SS473J
R 510	(A,38,7)	RS1/16SS102J
R 511	(A,34,19)	RS1/16SS103J
R 512	(B,39,31)	RS1/16SS473J
R 513	(B,60,16)	RS1/16SS103J
R 514	(B,39,29)	RS1/16SS473J
R 515	(A,30,12)	RS1/16SS473J
R 517	(B,39,23)	RS1/16SS103J
R 519	(B,39,21)	RS1/16SS473J
R 521	(B,37,29)	RS1/16SS473J
R 533	(A,40,19)	RS1/16SS103J
R 534	(A,41,19)	RS1/16SS103J
R 535	(A,38,13)	RS1/16SS103J
R 536	(A,39,19)	RS1/16SS0R0J

CAPACITORS

Circuit Symbol and No.		Part No.
C 401	(A,25,13)	CCSRCH100D50
C 402	(A,24,20)	CCSSCH101J50
C 403	(A,27,16)	CKSSYB104K10
C 404	(A,20,24)	CCSSCH101J50
C 405	(B,14,28)	CCSRUJ220J50
C 406	(B,14,29)	CCSRUJ220J50
C 407	(B,13,32)	CKSSYB333K16
C 408	(B,12,32)	CKSSYB182K50
C 409	(A,21,29)	CSZS100M6R3
C 410	(B,27,32)	CKSSYB103K16
C 411	(A,21,27)	CKSSYB102K50
C 412	(A,21,28)	CKSSYB102K50
C 413	(A,20,31)	CKSSYB104K10
C 414	(A,23,32)	CKSSYB104K10
C 415	(A,24,30)	CKSSYB104K10
C 416	(A,24,28)	CKSSYB104K10
C 417	(B,24,22)	CKSSYB104K10
C 418	(A,21,32)	CKSSYB102K50
C 419	(B,39,32)	CKSSYB104K10
C 420	(A,14,32)	CKSSYB104K10
C 421	(B,26,27)	CKSSYB102K50
C 422	(B,25,26)	CKSSYB103K16
C 423	(B,26,24)	CKSSYB104K10
C 424	(B,27,22)	CCSRCH102J50
C 425	(B,29,24)	CCSRCH271J50
C 426	(B,28,26)	CCSRCH102J50
C 427	(B,25,25)	CKSSYB104K10
C 428	(B,14,24)	CKSSYB103K16
C 429	(B,12,24)	CCSRCH301J50
C 430	(B,12,22)	CCSSCH120J50
C 431	(B,14,20)	CCSRCH301J50
C 432	(B,16,22)	CKSSYB103K16
C 433	(B,19,10)	CCSRCH101J50
C 434	(B,18,14)	CKSSYB102K50
C 435	(B,19,14)	CKSSYB103K16
C 436	(B,31,22)	CKSSYB104K10
C 441	(B,31,28)	CKSRYB104K16
C 442	(A,30,29)	CCSRCH101J50
C 443	(A,30,32)	CKSRYB104K16
C 444	(B,32,22)	CKSSYB103K16
C 445	(A,29,30)	CKSSYB104K10
C 461	(A,28,5) 22µF/6.3V	CCH1408
C 462	(A,31,10)	CKSRYB104K16
C 463	(A,27,9)	CKSRYB104K16
C 464	(B,31,5)	CKSSYB103K16
C 465	(B,31,4)	CKSSYB103K16
C 466	(B,32,4)	CKSSYB103K16
C 467	(B,33,4)	CKSSYB103K16
C 468	(A,30,11)	CKSSYB104K10
C 469	(B,27,4)	CSZS100M10
C 470	(B,26,16)	CKSSYB104K10
C 471	(B,37,6)	CCSSCH101J50
C 501	(B,39,19)	CKSSYB104K10
C 502	(B,36,22)	CCSRCH150J50
C 503	(B,38,22)	CCSRCH150J50
C 504	(B,40,17)	CKSSYB104K10
C 506	(B,60,19)	CKSSYB104K10
C 507	(B,60,21)	CKSSYB104K10
C 508	(B,60,26)	CKSSYB104K10
C 509	(B,60,30)	CKSSYB104K10
C 511	(B,40,34)	CKSSYB104K10
C 512	(B,38,31)	CKSSYB104K10
C 514	(A,31,17)	CSZS100M6R3
C 515	(B,39,24)	CKSSYB104K10
C 516	(B,59,11)	CKSSYB104K10
C 517	(A,51,21)	CKSSYB104K10
C 518	(A,39,32)	CKSSYB104K10

G

Unit Number:CWM9918
Unit Name:System Unit

MISCELLANEOUS

IC 1001	(B,13,55) IC	NJM2137V

Circuit Symbol and No.			Part No.
IC 1002	(A,25,70)	IC	NJM2137V
IC 1003	(B,13,67)	IC	NJM2137V
IC 1201	(B,23,62)	IC	NJM2235V
IC 1202	(A,16,50)	IC	NJM2235V
IC 1204	(A,17,63)	IC	NJM2561F1
IC 1501	(B,86,18)	IC	TC74VHCT08AFTS1
IC 1502	(A,84,31)	IC	PE5478A
IC 1503	(A,63,42)	IC	TC7SH08FUS1
IC 1505	(A,93,57)	IC	TC7S04FU
IC 1506	(B,102,49)	IC	S-80840CNMC-B8Z
IC 1507	(A,96,57)	IC	TC7SH00FUS1
IC 1601	(B,56,22)	IC	HA12240FP
IC 1801	(B,44,76)	IC	TPD1018F
IC 1840	(A,127,67)	IC	S-812C50AUA-C3E
IC 1900	(A,135,82)	IC	M5237ML
IC 1902	(B,128,78)	IC	S-812C50AUA-C3E
IC 4001	(A,40,46)	IC	PML009A
IC 4100	(B,43,67)	IC	NJM2058V
IC 4200	(A,80,116)	IC	PAL007B
IC 4301	(A,147,45)	IC	NJM2391DL1-33
IC 4401	(B,43,38)	IC	TA2050FS1
IC 4500	(B,48,54)	IC	NJM2068V
Q 1201	(B,23,46)	Transistor	2SC4081
Q 1501	(A,61,21)	Transistor	IMD2A
Q 1502	(B,94,32)	Transistor	2SC4081
Q 1503	(B,95,48)	Transistor	UMD2N
Q 1601	(B,92,44)	Transistor	2SA1576
Q 1602	(B,95,40)	Transistor	DTC124EU
Q 1802	(A,64,37)	Transistor	2SA1576
Q 1810	(A,62,31)	Transistor	DTC114EU
Q 1820	(A,60,38)	Transistor	DTC114EU
Q 1821	(A,63,27)	Transistor	2SA1576
Q 1841	(A,137,65)	Transistor	2SB1184F5
Q 1842	(B,89,82)	Transistor	2SD1767
Q 1850	(B,131,69)	Transistor	UMD2N
Q 1851	(B,120,68)	Transistor	2SD1760F5
Q 1860	(B,81,78)	Transistor	IMX1
Q 1861	(B,93,15)	Transistor	2SC4081
Q 1881	(B,129,97)	Transistor	DTC114EU
Q 1882	(B,129,91)	Transistor	2SA1587
Q 1883	(B,135,94)	Transistor	IMX1
Q 1884	(B,142,83)	Transistor	2SD1760F5
Q 1885	(B,135,100)	Transistor	DTC114EU
Q 1900	(A,121,87)	Transistor	2SB1185
Q 1901	(A,118,83)	Transistor	UMX1N
Q 1902	(A,134,87)	Transistor	2SB1185
Q 1903	(A,142,71)	Transistor	2SB1260
Q 1904	(A,139,76)	Transistor	DTC114EU
Q 1920	(B,141,24)	Transistor	2SB1260
Q 1922	(A,162,8)	Transistor	2SD2396
Q 1923	(A,160,10)	Transistor	UMF23N
Q 1924	(B,133,25)	Transistor	DTC114EU
Q 1940	(B,135,55)	Transistor	DTC144EU
Q 1941	(B,139,58)	Transistor	2SA1577
Q 1942	(B,145,55)	Transistor	2SD1760F5
Q 1943	(B,148,47)	Transistor	UMD2N
Q 1960	(A,59,42)	Transistor	2SA1576
Q 4201	(A,85,90)	Transistor	2SC4081
Q 4202	(A,78,94)	Transistor	UMD2N
Q 4203	(B,17,93)	Transistor	DTC323TU

Circuit Symbol and No.			Part No.
Q 4204	(B,10,90)	Transistor	DTC323TU
Q 4205	(B,11,95)	Transistor	DTC323TU
Q 4206	(B,14,84)	Transistor	DTC323TU
Q 4207	(B,15,88)	Transistor	DTC323TU
Q 4208	(B,10,84)	Transistor	DTC323TU
Q 4209	(A,88,98)	Transistor	DTC124EU
Q 4210	(A,83,97)	Transistor	UMD2N
Q 4211	(A,81,89)	Transistor	UMD2N
Q 4212	(A,92,100)	Transistor	DTC124EU
Q 4500	(B,39,60)	Transistor	UMD2N
Q 4501	(B,50,61)	Transistor	DTC323TU
Q 4502	(B,44,61)	Transistor	DTC323TU
Q 4503	(B,54,61)	Transistor	UMD2N
D 1401	(A,22,109)	Diode	UMZ6R8N
D 1402	(A,22,105)	Diode	UMZ6R8N
D 1403	(A,26,109)	Diode	UMZ6R8N
D 1404	(A,14,109)	Diode	UMZ6R8N
D 1405	(A,29,109)	Diode	UMZ6R8N
D 1406	(A,16,104)	Diode	UMZ6R8N
D 1407	(A,26,105)	Diode	UMZ6R8N
D 1408	(A,18,109)	Diode	UMZ6R8N
D 1409	(A,20,103)	Diode	UMZ6R8N
D 1450	(B,102,108)	Diode	UDZS5R6(B)
D 1451	(B,102,102)	Diode	UDZS5R6(B)
D 1501	(B,95,52)	Diode	1SS355
D 1651	(A,53,16)	Diode	UDZS5R6(B)
D 1652	(A,50,16)	Diode	UDZS5R6(B)
D 1801	(A,47,86)	Diode	S1G-6904G2P
D 1802	(A,46,99)	Diode	1SS355
D 1803	(A,45,95)	Diode	1SS355
D 1804	(A,47,89)	Diode	PZT27(B)
D 1805	(A,61,100)	Diode	S1G-6904G2P
D 1806	(B,55,116)	Diode	PZT27(B)
D 1810	(A,59,32)	Diode	1SS355
D 1811	(A,59,30)	Diode	RB500V-40
D 1812	(A,51,93)	Diode	UDZS18(B)
D 1813	(A,49,92)	Diode	UDZS18(B)
D 1814	(A,59,29)	Diode	UDZS6R8(B)
D 1815	(A,54,100)	Diode	S1G-6904G2P
D 1820	(A,45,99)	Diode	1SS400
D 1821	(A,45,92)	Diode	DAN202U
D 1822	(A,28,98)	Diode	5KP22A
D 1841	(B,95,80)	Diode	UDZS20(B)
D 1850	(B,127,71)	Diode	HZU6R2(B1)
D 1860	(B,71,87)	Diode	HZU7R5(B3)
D 1861	(B,79,84)	Diode	KS926S2
D 1862	(B,88,78)	Diode	RB500V-40
D 1863	(B,88,76)	Diode	UDZS18(B)
D 1864	(B,77,79)	Diode	RB500V-40
D 1865	(B,96,16)	Diode	HZU6R8(B2)
D 1866	(A,106,89)	Diode	S1G-6904G2P
D 1867	(A,107,85)	Diode	RB500V-40
D 1880	(B,137,92)	Diode	RB500V-40
D 1881	(B,139,92)	Diode	RB500V-40
D 1882	(B,136,102)	Diode	HZU9R1(B1)
D 1883	(B,141,91)	Diode	HZU13(B1)
D 1900	(A,124,82)	Diode	HZU8R2(B1)
D 1901	(A,122,79)	Diode	1SS355
D 1921	(A,155,9)	Diode	HZU8R2(B2)
D 1940	(B,146,47)	Diode	HZU11(B2)

Circuit Symbol and No.		Part No.
D 1960	(A,40,91) Diode	1SS355
D 1961	(A,37,102) Diode	1SS355
D 4200	(A,89,94) Diode	DAN202U
D 4201	(A,88,90) Diode	DAN202U
D 4202	(A,79,91) Diode	UDZS8R2(B)
D 4203	(A,76,91) Diode	MA111
D 4204	(A,91,97) Diode	DAN202U
D 4300	(A,148,54) Diode	1SR154-400
D 4301	(A,148,51) Diode	1SR154-400
D 4302	(A,148,58) Diode	1SR154-400
D 4500	(B,57,57) Diode	DAN202U
D 4501	(B,60,57) Diode	DAN202U
D 4502	(B,56,53) Diode	DAN202U
D 4600	(A,59,61) Diode	1SS355
D 4601	(A,57,54) Diode	UDZS4R7(B)
ZNR4300	(B,157,91) Surge Protector	CSA30-201N
L 1001	(A,16,53) Inductor	CTF1399
L 1002	(A,31,69) Inductor	CTF1399
L 1003	(A,11,56) Inductor	CTF1399
L 1201	(A,38,67) Inductor	CTF1334
L 1202	(B,28,67) Inductor	LCYC2R2K1608
L 1203	(A,22,45) Inductor	LCYC2R2K1608
L 1204	(A,25,50) Inductor	CTF1334
L 1205	(A,24,64) Inductor	LCYC2R2K1608
L 1207	(B,25,34) Inductor	LCYC2R2K1608
L 1301	(B,106,48) Inductor	CTF1389
L 1302	(B,107,55) Inductor	CTF1389
L 1303	(B,119,49) Inductor	CTF1389
L 1304	(B,119,55) Inductor	CTF1389
L 1305	(B,111,47) Inductor	LCTAW2R2J2520
L 1401	(A,16,101) Inductor	CTF1334
L 1402	(A,15,101) Inductor	CTF1334
L 1403	(A,13,102) Inductor	CTF1334
L 1404	(A,18,101) Inductor	CTF1334
L 1405	(A,12,109) Inductor	CTF1306
L 1406	(A,11,105) Inductor	CTF1306
L 1407	(A,10,109) Inductor	CTF1306
L 1408	(A,9,105) Inductor	CTF1306
L 1409	(A,8,109) Inductor	CTF1306
L 1410	(A,7,105) Inductor	CTF1306
L 1450	(B,104,112) Inductor	CTF1334
L 1451	(B,104,106) Inductor	CTF1334
L 1501	(A,97,43) Inductor	CTF1379
L 1502	(B,90,20) Inductor	CTF1334
L 1503	(A,70,23) Inductor	CTF1379
L 1504	(A,98,22) Inductor	CTF1379
L 1505	(A,70,39) Inductor	CTF1379
L 1506	(A,62,44) Inductor	CTF1334
L 1507	(A,83,49) Inductor	CTF1379
L 1508	(A,94,61) Inductor	CTF1334
L 1509	(A,95,61) Inductor	CTF1334
L 1510	(B,99,51) Inductor	CTF1334
L 1605	(B,52,23) Inductor	LCTAW2R2J2520
L 1651	(A,50,22) Inductor	CTF1306
L 1652	(A,49,22) Inductor	CTF1306
L 1701	(B,24,19) Inductor	CTF1463
L 1702	(B,23,23) Inductor	CTF1463
L 1703	(B,31,18) Ferrite Bead	CTF1528
L 1704	(A,42,6) Ferrite Bead	CTF1528
L 1705	(A,40,7) Ferrite Bead	CTF1528

Circuit Symbol and No.		Part No.
L 1801	(A,46,102) Inductor	CTF1556
L 1802	(A,50,102) Inductor	CTF1556
L 1810	(A,32,91) Inductor	CTF1306
L 1811	(A,52,103) Inductor	CTF1306
L 1822	(A,42,92) Inductor	LCTC2R2K1608
L 1823	(A,45,102) Inductor	CTF1556
L 1830	(A,81,85) Choke Coil 100µH	CTH1315
L 1960	(A,36,94) Inductor	CTF1556
L 4000	(A,26,39) Inductor	LCTAW2R2J2520
L 4300	(B,155,54) Inductor	LCTAW1R0J2520
L 4301	(B,157,86) Inductor	LCTAW4R7J2520
L 4302	(B,155,32) Inductor	LCTAW1R0J2520
L 4303	(B,156,75) Inductor	LCTAW1R0J2520
X 1501	(A,86,46) Radiator 12.58MHz	CSS1601
⚠FU1401	(A,28,90) Fuse 3.15A	CEK1259
⚠FU1402	(A,11,97) Fuse 3A	CEK1286
⚠FU1820	(B,47,84) Fuse 2A	CEK1257
⚠FU1821	(B,41,81) Fuse 2A	CEK1257
⚠FU1823	(A,101,89) Fuse 4A	CEK1288
⚠FU1830	(A,78,80) Fuse 1A	CEK1254
⚠FU1840	(A,122,67) Fuse 250mA	CEK1276
⚠FU1880	(A,101,95) Fuse 0.5A	CEK1278
⚠FU1900	(A,143,74) Fuse 1A	CEK1280
⚠FU1920	(A,144,33) Fuse 1.75A	CEK1283
EF1401	(A,29,105) EMI Filter	CCG1067
EF1402	(A,14,79) EMI Filter	CCG1067
EF1403	(A,22,91) EMI Filter	CCG1067
EF1801	(A,41,100) EMI Filter	CCG1172
EF1820	(B,42,88) EMI Filter	CCG1172
EF1821	(B,38,89) EMI Filter	CCG1172

RESISTORS

R 1001	(B,12,41)	RS1/16SS750J
R 1002	(B,11,43)	RS1/16SS103J
R 1003	(A,24,90)	RS1/16SS750J
R 1004	(A,24,80)	RS1/16SS103J
R 1005	(B,14,80)	RS1/16SS750J
R 1006	(B,13,78)	RS1/16SS103J
R 1007	(B,14,43)	RS1/16SS103J
R 1008	(A,26,80)	RS1/16SS103J
R 1009	(B,11,78)	RS1/16SS103J
R 1010	(B,13,47)	RS1/16S4701D
R 1011	(B,11,49)	RS1/16S4701D
R 1012	(A,28,79)	RS1/16S4701D
R 1013	(A,23,77)	RS1/16S4701D
R 1014	(B,12,74)	RS1/16S4701D
R 1015	(B,14,73)	RS1/16S4701D
R 1016	(B,16,51)	RS1/16SS101J
R 1017	(B,14,49)	RS1/16S4701D
R 1018	(B,11,50)	RS1/16S4701D
R 1019	(B,10,52)	RS1/16SS102J
R 1020	(A,29,75)	RS1/16SS101J
R 1021	(A,26,76)	RS1/16S4701D
R 1022	(A,23,75)	RS1/16S4701D
R 1023	(A,22,68)	RS1/16SS102J
R 1024	(B,10,70)	RS1/16SS101J
R 1025	(B,11,73)	RS1/16S4701D
R 1026	(B,14,72)	RS1/16S4701D
R 1027	(B,15,70)	RS1/16SS102J

Circuit Symbol and No.		Part No.
R 1028	(B,13,60)	RS1/16SS563J
R 1029	(B,17,56)	RS1/16SS473J
R 1030	(A,28,69)	RS1/16SS563J
R 1031	(A,29,71)	RS1/16SS473J
R 1032	(B,12,62)	RS1/16SS563J
R 1033	(B,10,66)	RS1/16SS473J
R 1201	(B,23,65)	RS1/16SS105J
R 1202	(A,14,46)	RS1/16SS105J
R 1203	(B,23,66)	RS1/16SS105J
R 1204	(A,14,47)	RS1/16SS105J
R 1205	(B,23,69)	RS1/16SS105J
R 1207	(A,17,60)	RS1/16SS105J
R 1208	(B,17,50)	RS1/16SS0R0J
R 1213	(A,19,76)	RS1/16SS750J
R 1217	(B,21,48)	RS1/16S0R0J
R 1218	(B,24,42)	RS1/16S183J
R 1219	(A,24,43)	RS1/16SS0R0J
R 1220	(B,22,44)	RS1/16SS102J
R 1301	(B,109,54)	RS1/16SS101J
R 1302	(B,113,48)	RS1/16SS101J
R 1303	(B,113,54)	RS1/16SS101J
R 1304	(B,122,55)	RS1/16SS101J
R 1305	(B,123,48)	RS1/16SS101J
R 1501	(B,91,17)	RS1/16SS104J
R 1502	(B,89,17)	RS1/16SS104J
R 1503	(B,82,18)	RS1/16SS104J
R 1504	(B,82,20)	RS1/16SS104J
R 1505	(A,65,17)	RS1/16SS103J
R 1506	(A,65,18)	RS1/16SS103J
R 1507	(B,78,9)	RS1/16SS473J
R 1508	(A,79,14)	RS1/16SS473J
R 1509	(A,80,14)	RS1/16SS473J
R 1510	(A,81,14)	RS1/16SS473J
R 1511	(B,81,13)	RS1/16SS473J
R 1512	(B,82,12)	RS1/16SS473J
R 1513	(B,84,12)	RS1/16SS104J
R 1514	(B,86,11)	RS1/16SS104J
R 1515	(A,65,16)	RS1/16SS102J
R 1516	(A,65,19)	RS1/16SS102J
R 1518	(B,78,13)	RS1/16SS473J
R 1519	(B,94,22)	RS1/16SS0R0J
R 1520	(B,94,21)	RS1/16SS0R0J
R 1521	(A,77,14)	RAB4C681J
R 1522	(A,84,14)	RAB4C681J
R 1523	(A,88,14)	RAB4C681J
R 1524	(A,92,14)	RAB4C681J
R 1525	(A,70,19)	RAB4C681J
R 1526	(A,96,15)	RS1/16SS681J
R 1527	(B,101,15)	RS1/16SS104J
R 1529	(A,98,19)	RAB4C681J
R 1530	(B,101,14)	RS1/16SS104J
R 1531	(A,70,25)	RAB4C681J
R 1532	(A,98,25)	RAB4C681J
R 1533	(A,70,28)	RS1/16SS681J
R 1534	(B,99,25)	RS1/16SS473J
R 1535	(A,70,30)	RAB4C681J
R 1536	(B,97,27)	RS1/16SS473J
R 1537	(A,97,27)	RS1/16SS681J
R 1538	(A,97,28)	RS1/16SS473J
R 1539	(A,98,31)	RAB4C681J

Circuit Symbol and No.		Part No.
R 1540	(B,97,28)	RS1/16SS473J
R 1541	(A,70,34)	RAB4C681J
R 1542	(B,97,30)	RS1/16SS473J
R 1543	(B,97,29)	RS1/16SS473J
R 1544	(B,97,31)	RS1/16SS473J
R 1545	(B,94,29)	RS1/16S473J
R 1546	(A,66,42)	RS1/16SS473J
R 1547	(A,97,33)	RS1/16SS473J
R 1548	(A,98,36)	RAB4C681J
R 1549	(B,94,28)	RS1/16S473J
R 1550	(A,70,41)	RAB4C101J
R 1551	(A,98,40)	RAB4C681J
R 1552	(B,104,41)	RS1/16SS472J
R 1554	(B,103,42)	RS1/16SS473J
R 1555	(B,79,40)	RS1/16SS473J
R 1557	(A,90,46)	RS1/16SS473J
R 1558	(A,76,47)	RAB4C681J
R 1559	(A,79,47)	RAB4C681J
R 1561	(A,92,46)	RS1/16SS681J
R 1562	(A,75,50)	RS1/16SS104J
R 1563	(A,93,46)	RS1/16SS0R0J
R 1564	(A,76,50)	RS1/16SS104J
R 1565	(A,74,50)	RS1/16SS104J
R 1566	(B,95,51)	RS1/16SS473J
R 1567	(B,97,50)	RS1/16SS101J
R 1568	(A,96,16)	RS1/16SS681J
R 1569	(B,97,19)	RS1/16SS104J
R 1570	(A,99,21)	RS1/16SS473J
R 1601	(B,58,16)	RS1/10S620J
R 1602	(B,56,16)	RS1/10S101J
R 1603	(B,60,16)	RS1/10S101J
R 1604	(B,54,26)	RS1/16SS0R0J
R 1605	(B,55,26)	RS1/16SS0R0J
R 1606	(B,53,17)	RS1/16SS102J
R 1607	(B,96,43)	RS1/10S122J
R 1608	(B,90,44)	RS1/16S332J
R 1609	(B,91,40)	RS1/16S682J
R 1701	(B,39,14)	RS1/16SS0R0J
R 1702	(B,39,7)	RS1/16SS0R0J
R 1704	(B,42,23)	RS1/16SS0R0J
R 1706	(B,34,19)	RS1/16SS0R0J
R 1709	(B,30,21)	RS1/16SS0R0J
R 1711	(B,29,20)	RS1/16SS0R0J
R 1713	(B,28,22)	RS1/16SS0R0J
R 1714	(B,26,21)	RS1/16SS0R0J
R 1720	(B,14,18)	RS1/16SS0R0J
R 1721	(B,9,19)	RS1/16SS0R0J
R 1722	(B,12,18)	RS1/16SS0R0J
R 1801	(A,64,35)	RS1/16SS101J
R 1802	(B,39,75)	RS1/16SS102J
R 1803	(B,39,77)	RS1/16SS103J
R 1804	(A,48,102)	RS1/16S4701D
R 1805	(A,63,33)	RS1/16SS471J
R 1806	(A,64,40)	RS1/16SS103J
R 1807	(A,50,98)	RS1/10S103J
R 1810	(A,36,90)	RS1/8S471J
R 1811	(A,41,86)	RS1/8S471J
R 1820	(A,62,39)	RS1/16SS473J
R 1821	(A,64,29)	RS1/16SS102J
R 1823	(A,66,27)	RS1/16SS472J

Circuit Symbol and No.		Part No.
R 1824	(A,63,25)	RS1/16S472J
R 1825	(A,44,96)	RS1/16SS103J
R 1826	(A,34,92)	RS1/16SS153J
R 1827	(B,113,95)	RS1/10S0R0J
R 1834	(A,86,80)	RS1/10S0R0J
R 1840	(A,121,65)	RS1/16SS0R0J
R 1843	(A,131,69)	RS1/16SS0R0J
R 1844	(A,132,65)	RS1/16SS471J
R 1846	(B,92,81)	RS1/16SS820J
R 1847	(B,92,83)	RS1/16SS820J
R 1848	(B,110,66)	RS1/16SS0R0J
R 1849	(B,89,86)	RS1/16S0R0J
R 1850	(B,128,66)	RS1/10S181J
R 1851	(B,131,65)	RS1/10S181J
R 1852	(B,133,65)	RS1/10S181J
R 1853	(B,129,68)	RS1/16SS221J
R 1862	(B,69,85)	RS1/16SS473J
R 1863	(B,71,86)	RS1/16SS473J
R 1864	(B,85,76)	RS1/16SS103J
R 1865	(B,84,76)	RS1/16SS474J
R 1866	(B,95,15)	RS1/16SS223J
R 1867	(B,94,17)	RS1/16SS223J
R 1880	(B,129,93)	RS1/16SS103J
R 1881	(B,131,96)	RS1/16SS103J
R 1882	(B,129,94)	RS1/16SS512J
R 1883	(B,133,90)	RS1/16SS224J
R 1884	(B,135,91)	RS1/16SS472J
R 1885	(B,132,98)	RS1/10S221J
R 1886	(B,132,103)	RS1/8S221J
R 1887	(B,136,105)	RS1/8S221J
R 1888	(B,133,92)	RS1/16SS0R0J
R 1900	(A,114,78)	RS1/10S0R0J
R 1901	(A,122,81)	RS1/16S221J
R 1902	(A,144,64)	RS1/10S0R0J
R 1903	(A,122,82)	RS1/16S471J
R 1904	(A,118,79)	RS1/16S101J
R 1905	(A,118,77)	RS1/16S471J
R 1906	(A,122,84)	RS1/16S223J
R 1907	(A,118,80)	RS1/16S103J
R 1908	(A,132,83)	RS1/16S2202D
R 1909	(A,132,80)	RS1/16S2201D
R 1910	(A,130,80)	RS1/16S4301D
R 1911	(A,139,81)	RS1/16SS821J
R 1912	(A,139,83)	RS1/16SS221J
R 1913	(A,144,79)	RS1/8S821J
R 1914	(A,144,75)	RS1/16SS153J
R 1915	(A,141,79)	RS1/8S821J
R 1917	(A,110,71)	RS1/16SS0R0J
R 1920	(B,136,30)	RS1/10S0R0J
R 1921	(B,140,30)	RS1/10S0R0J
R 1922	(B,137,27)	RS1/16SS103J
R 1923	(A,157,7)	RS1/16SS221J
R 1924	(A,164,11)	RS1/10S121J
R 1925	(A,168,11)	RS1/10S121J
R 1926	(A,168,8)	RS1/10S121J
R 1927	(B,142,19)	RS1/10S0R0J
R 1930	(B,137,26)	RS1/16SS471J
R 1931	(B,135,26)	RS1/16SS471J
R 1932	(A,160,12)	RS1/16SS223J
R 1933	(A,162,12)	RS1/16SS183J

Circuit Symbol and No.		Part No.
R 1940	(B,140,55)	RS1/16SS1R0J
R 1941	(B,138,59)	RS1/16SS103J
R 1942	(B,139,61)	RS1/16SS223J
R 1943	(B,146,50)	RS1/16SS221J
R 1944	(B,150,59)	RS1/16SS121J
R 1945	(B,150,57)	RS1/16SS121J
R 1946	(B,150,55)	RS1/16SS121J
R 1949	(B,141,51)	RS1/16SS1R0J
R 1960	(A,57,41)	RS1/16SS101J
R 1961	(A,58,38)	RS1/16SS471J
R 1962	(A,59,40)	RS1/16SS103J
R 1963	(A,36,92)	RS1/10S103J
R 4000	(A,37,34)	RS1/16SS102J
R 4001	(A,46,32)	RS1/16SS102J
R 4003	(A,36,33)	RS1/16SS181J
R 4004	(A,36,34)	RS1/16SS223J
R 4005	(A,35,34)	RS1/16SS102J
R 4006	(A,47,33)	RS1/16SS181J
R 4007	(A,47,35)	RS1/16SS223J
R 4008	(A,49,34)	RS1/16SS102J
R 4009	(A,32,54)	RS1/16SS0R0J
R 4010	(A,48,55)	RS1/16SS0R0J
R 4016	(A,34,56)	RS1/16SS101J
R 4017	(B,47,63)	RS1/16SS224J
R 4019	(A,47,58)	RS1/16SS101J
R 4020	(B,41,63)	RS1/16SS224J
R 4021	(A,41,56)	RS1/16SS0R0J
R 4100	(B,40,71)	RS1/16SS472J
R 4101	(B,46,70)	RS1/16SS472J
R 4102	(B,46,71)	RS1/16SS472J
R 4103	(B,40,70)	RS1/16SS472J
R 4108	(B,37,68)	RS1/16SS472J
R 4109	(B,36,68)	RS1/16SS472J
R 4110	(B,37,66)	RS1/16SS472J
R 4111	(B,41,64)	RS1/16SS471J
R 4112	(B,49,68)	RS1/16SS472J
R 4113	(B,48,67)	RS1/16SS472J
R 4114	(B,49,65)	RS1/16SS472J
R 4115	(B,50,65)	RS1/16SS471J
R 4202	(A,82,91)	RS1/16SS223J
R 4203	(A,85,88)	RS1/16SS103J
R 4204	(A,81,92)	RS1/16SS473J
R 4205	(A,43,83)	RS1/16SS101J
R 4206	(A,41,76)	RS1/16SS101J
R 4207	(A,46,76)	RS1/16SS471J
R 4208	(A,37,81)	RS1/16SS561J
R 4209	(A,37,77)	RS1/16SS471J
R 4210	(A,29,79)	RS1/16SS561J
R 4211	(A,90,100)	RS1/16SS103J
R 4212	(A,86,99)	RS1/16SS103J
R 4213	(B,20,91)	RS1/16SS223J
R 4214	(B,13,87)	RS1/16SS223J
R 4215	(B,14,93)	RS1/16SS223J
R 4216	(B,19,91)	RS1/16SS471J
R 4217	(B,12,87)	RS1/16SS471J
R 4218	(B,13,92)	RS1/16SS471J
R 4219	(B,16,83)	RS1/16SS223J
R 4220	(B,16,89)	RS1/16SS223J
R 4221	(B,12,81)	RS1/16SS223J
R 4222	(B,17,83)	RS1/16SS471J

Circuit Symbol and No.		Part No.
R 4223	(B,17,89)	RS1/16SS471J
R 4224	(B,11,81)	RS1/16SS471J
R 4225	(A,85,99)	RS1/16SS221J
R 4226	(A,80,106)	RS1/16SS101J
R 4227	(A,81,98)	RS1/10S102J
R 4228	(A,102,102)	RS1/16SS103J
R 4229	(A,102,103)	RS1/16SS103J
R 4230	(A,78,90)	RS1/16SS391J
R 4231	(A,78,89)	RS1/16SS391J
R 4233	(A,70,100)	RS1/16SS102J
R 4302	(B,155,40)	RS1/16S681J
R 4303	(B,156,66)	RS1/16S681J
R 4304	(B,156,68)	RS1/16S681J
R 4305	(B,154,71)	RS1/16S681J
R 4306	(B,156,60)	RS1/16S681J
R 4308	(B,156,63)	RS1/16S681J
R 4315	(B,154,26)	RS1/16S0R0J
R 4409	(B,44,44)	RS1/16SS102J
R 4412	(B,41,46)	RS1/16SS101J
R 4413	(B,39,46)	RS1/16SS101J
R 4414	(B,43,45)	RS1/16SS223J
R 4415	(B,38,45)	RS1/16SS223J
R 4416	(B,38,44)	RS1/16SS102J
R 4500	(B,52,47)	RS1/16SS104J
R 4501	(B,52,49)	RS1/16SS102J
R 4502	(B,47,49)	RS1/16SS102J
R 4503	(B,43,51)	RS1/16SS473J
R 4504	(B,54,49)	RS1/16SS473J
R 4505	(B,43,54)	RS1/16SS0R0J
R 4506	(B,43,52)	RS1/16SS473J
R 4507	(B,52,51)	RS1/16SS473J
R 4508	(B,53,54)	RS1/16SS0R0J
R 4509	(B,43,57)	RS1/16SS331J
R 4510	(B,51,58)	RS1/16SS331J
R 4511	(B,51,59)	RS1/16SS104J
R 4512	(B,45,59)	RS1/16SS104J
R 4515	(B,59,52)	RS1/16SS0R0J
R 4600	(A,59,63)	RS1/16SS102J

CAPACITORS

C 1001	(B,16,43) 10µF	CCG1171
C 1002	(B,10,46) 10µF	CCG1171
C 1003	(A,28,83) 10µF	CCG1171
C 1004	(A,21,79) 10µF	CCG1171
C 1005	(B,9,78) 10µF	CCG1171
C 1006	(B,15,77) 10µF	CCG1171
C 1007	(B,13,43)	CKSRYB473K50
C 1008	(A,26,78)	CKSRYB473K50
C 1009	(B,12,78)	CKSRYB473K50
C 1010	(B,14,50)	CCSRCK1R0C50
C 1012	(A,26,75)	CCSRCK1R0C50
C 1014	(B,11,72)	CCSRCK1R0C50
C 1016	(B,15,55)	CKSRYB105K10
C 1017	(A,28,71)	CKSRYB105K10
C 1018	(B,15,67)	CKSRYB105K10
C 1019	(A,16,57)	CEVW100M16
C 1020	(A,33,73)	CEVW100M16
C 1021	(A,12,63)	CEVW100M16
C 1022	(B,15,59)	CKSRYB104K16
C 1023	(A,30,72)	CKSRYB104K16

Circuit Symbol and No.		Part No.
C 1024	(B,10,63)	CKSRYB104K16
C 1201	(A,12,47)	CKSQYB225K10
C 1202	(A,11,47)	CKSQYB225K10
C 1203	(B,21,66)	CKSQYB225K10
C 1204	(B,19,66)	CKSQYB225K10
C 1205	(A,37,68)	CKSRYB104K16
C 1206	(A,32,64)	CEVW101M16
C 1207	(A,28,60)	CKSRYB103K50
C 1208	(B,25,67)	CKSRYB104K16
C 1209	(B,26,68)	CKSYF106Z10
C 1210	(A,27,50)	CKSRYB104K16
C 1211	(A,18,44)	CKSRYB104K16
C 1213	(A,19,47)	CKSRYB104K16
C 1214	(B,28,60)	CKSQYB225K10
C 1215	(A,26,56)	CEVW101M16
C 1216	(A,19,45)	CKSYF106Z10
C 1217	(A,27,51)	CKSRYB103K50
C 1218	(A,20,54)	CKSQYB225K10
C 1219	(A,22,63)	CKSYF106Z10
C 1222	(A,20,62)	CKSRYB104K16
C 1223	(A,17,70)	CEVW101M16
C 1224	(A,11,71)	CEVW220M6R3
C 1233	(B,24,44)	CKSRYB104K16
C 1301	(B,105,55)	CKSRYB103K50
C 1302	(B,108,48)	CKSRYB103K50
C 1307	(B,109,48)	CKSRYB103K50
C 1405	(A,12,99)	CKSRYB471K50
C 1406	(A,11,99)	CKSRYB471K50
C 1407	(A,9,99)	CKSRYB471K50
C 1408	(A,8,99)	CKSRYB471K50
C 1409	(A,7,99)	CKSRYB471K50
C 1410	(A,5,99)	CKSRYB471K50
C 1411	(A,9,95)	CKSRYB103K50
C 1450	(B,105,110)	CKSRYB102K50
C 1451	(B,104,103)	CKSRYB102K50
C 1501	(A,96,51)	CEVLW100M16
C 1502	(A,95,47)	CKSRYB103K50
C 1503	(B,89,20)	CKSSYB104K10
C 1504	(A,94,44)	CKSRYB103K50
C 1505	(A,63,18)	CKSSYB104K10
C 1506	(B,78,22)	CKSSYB104K10
C 1507	(B,78,23)	CKSSYB104K10
C 1508	(B,79,26)	CKSRYB102K50
C 1509	(B,92,27)	CKSRYB104K16
C 1510	(A,70,38)	CKSRYB102K50
C 1511	(A,65,44)	CKSSYB104K10
C 1512	(A,88,46)	CKSRYB105K10
C 1513	(A,83,46)	CKSRYB102K50
C 1515	(A,91,46)	CKSRYB103K50
C 1516	(A,93,59)	CKSRYF104Z25
C 1517	(B,98,48)	CKSQYB225K10
C 1519	(A,96,59)	CKSRYF104Z25
C 1520	(B,103,52)	CKSSYB104K10
C 1521	(B,97,47)	CKSSYB103K16
C 1603	(B,61,21)	CKSRYB102K50
C 1606	(B,61,22)	CKSRYB102K50
C 1608	(B,61,23)	CKSRYB104K16
C 1651	(A,53,19)	CKSRYB103K50
C 1652	(A,50,19)	CKSRYB103K50
C 1653	(A,47,13)	CKSRYB104K25

Circuit Symbol and No.		Part No.
C 1709	(B,22,20)	CKSSYB104K10
C 1712	(B,24,26)	CKSSYB104K10
C 1801	(B,48,75)	CKSRYF104Z25
C 1802	(B,48,78)	CKSRYB473K25
C 1803	(A,40,97)	CKSRYF104Z25
C 1804	(B,44,100)	CKSRYF104Z25
C 1806	(B,44,116)	CKSQYF103Z50
C 1807	(B,46,116)	CKSQYF104Z50
C 1810	(A,43,87)	CKSRYF104Z25
C 1811	(B,57,101)	CKSRYB471K50
C 1812	(B,63,115)	CKSRYB471K50
C 1813	(B,55,100)	CKSRYB471K50
C 1814	(B,61,115)	CKSRYB471K50
C 1815	(B,54,100)	CKSRYB471K50
C 1816	(B,60,115)	CKSRYB471K50
C 1817	(B,53,100)	CKSRYB471K50
C 1818	(B,59,115)	CKSRYB471K50
C 1819	(B,43,100)	CKSRYB471K50
C 1824	(B,41,84)	CKSRYF104Z25
C 1825	(A,60,35)	CKSRYB105K10
C 1826	(A,43,96)	CKSRYF104Z25
C 1828	(B,39,85)	CKSRYF104Z25
C 1830	(A,87,77)	CKSQYB104K25
C 1831	(A,99,73)	CEVLW330M25
C 1832	(A,86,77)	CKSRYB104K25
C 1833	(A,92,73)	CEVLW330M25
C 1840	(A,140,55)	CEVW101M16
C 1841	(A,122,69)	CKSRYB103K50
C 1843	(A,104,63)	CEVW101M16
C 1845	(A,128,71)	CKSRYB103K50
C 1847	(B,95,82)	CKSRYB104K25
C 1850	(B,129,71)	CKSRYB473K50
C 1851	(A,114,65)	CEVLW101M10
C 1852	(B,110,69)	CKSRYB103K50
C 1855	(B,132,95)	CKSRYB472K50
C 1880	(B,132,91)	CKSRYB104K16
C 1881	(B,144,92)	CKSRYB103K50
C 1882	(A,145,93)	CEVW100M16
C 1883	(B,143,94)	CKSRYB103K50
C 1884	(A,94,92)	CEVW101M16
C 1900	(A,126,82)	CKSRYB104K25
C 1901	(A,128,76)	CEVW101M16
C 1902	(A,118,81)	CKSRYB102K50
C 1903	(A,150,87)	CEVW101M16
C 1904	(A,129,80)	CKSRYB103K50
C 1905	(A,130,83)	CKSRYB102K50
C 1906	(A,143,86)	CEVW101M16
C 1907	(A,138,71)	CKSRYB103K50
C 1908	(A,140,74)	CKSRYB104K25
C 1910	(A,116,73)	CEVLW101M10
C 1911	(B,125,77)	CKSRYB103K50
C 1912	(B,132,77)	CKSRYB104K25
C 1920	(A,148,25)	CEVW221M10
C 1921	(B,134,22)	CKSRYB473K50
C 1922	(A,135,16)	CEVW101M16
C 1923	(A,170,9)	CKSRYB102K50
C 1924	(A,135,8)	CEVW100M16
C 1925	(A,157,10)	CKSRYB473K50
C 1926	(A,137,25)	CEVW221M10
C 1940	(B,141,56)	CKSRYB104K16

Circuit Symbol and No.		Part No.
C 1942	(B,142,47)	CKSRYB104K25
C 1944	(B,144,47)	CKSRYB473K50
C 1960	(A,35,102)	CKSRYF103Z50
C 4000	(A,44,33)	CKSRYB152K50
C 4001	(A,39,33)	CKSRYB152K50
C 4002	(A,31,39)	CKSRYB102K50
C 4003	(A,30,33)	CEVW470M16
C 4004	(A,31,37)	CKSRYB104K16
C 4005	(A,36,37)	CKSRYB105K10
C 4006	(A,37,37)	CKSRYB105K6R3
C 4007	(A,39,37)	CKSRYB105K6R3
C 4008	(A,40,37)	CKSRYB104K16
C 4009	(A,43,37)	CKSRYB104K16
C 4010	(A,44,37)	CKSRYB105K6R3
C 4011	(A,34,37)	CKSRYB105K10
C 4012	(A,45,37)	CKSRYB105K6R3
C 4013	(A,46,37)	CKSRYB105K10
C 4014	(A,48,37)	CKSRYB105K10
C 4015	(A,30,41)	CKSYB475K16
C 4016	(A,30,43)	CKSYB475K16
C 4017	(A,30,46)	CKSYB475K16
C 4018	(A,30,48)	CKSYB475K16
C 4019	(A,50,41)	CKSYB475K16
C 4020	(A,50,43)	CKSYB475K16
C 4021	(A,50,46)	CKSYB475K16
C 4022	(A,50,48)	CKSYB475K16
C 4023	(A,33,52)	CCSRCH100D50
C 4024	(A,34,54)	CCSRCH100D50
C 4025	(A,35,55)	CCSRCH100D50
C 4026	(A,40,60)	CEVW100M16
C 4027	(A,42,55)	CKSRYB104K16
C 4034	(A,43,55)	CKSRYB104K16
C 4035	(A,45,55)	CCSRCH100D50
C 4036	(A,46,55)	CCSRCH100D50
C 4037	(A,47,52)	CCSRCH100D50
C 4038	(A,38,57)	CKSRYB104K16
C 4100	(B,36,62) 10µF	CCG1138
C 4101	(B,56,64) 10µF	CCG1138
C 4102	(B,51,63)	CKSRYB105K6R3
C 4103	(B,36,66)	CKSRYB105K6R3
C 4106	(B,38,69)	CCSRCH101J50
C 4107	(B,38,65)	CCSRCH101J50
C 4108	(B,48,69)	CCSRCH101J50
C 4109	(B,48,65)	CCSRCH101J50
C 4110	(B,43,71)	CKSRYB104K16
C 4111	(A,47,67)	CEVW100M16
C 4200	(A,48,79)	CEVW100M16
C 4201	(A,43,73)	CEVW100M16
C 4202	(A,49,73)	CEVW100M16
C 4203	(A,39,73)	CEVW100M16
C 4204	(A,41,79)	CEVW100M16
C 4205	(A,33,79)	CEVW100M16
C 4206	(A,70,98)	CKSRYB105K10
C 4207	(A,70,96)	CKSRYB105K10
C 4208	(A,77,98)	CKSRYB105K10
C 4209	(A,75,99)	CKSRYB105K10
C 4210	(A,67,97)	CKSRYB105K10
C 4211	(A,74,100)	CKSRYB105K10
C 4212	(A,76,96)	CKSRYB105K10
C 4213	(A,78,98)	CKSRYB105K10

Circuit Symbol and No.		Part No.
C 4215	(A,91,105) 10µF	CCG1138
C 4216	(A,72,91)	CKSRYB104K25
C 4217	(A,70,103)	CEHVW100M16
C 4218	(B,19,93)	CKSRYB222K50
C 4219	(B,12,89)	CKSRYB222K50
C 4220	(B,13,94)	CKSRYB222K50
C 4224	(B,17,87)	CKSRYB222K50
C 4225	(B,12,83)	CKSRYB222K50
C 4229	(B,16,82)	CKSRYB222K50
C 4230	(A,77,105)	CKSYB475K16
C 4231	(A,79,105)	CKSYB475K16
C 4232	(A,58,79) 2200µF/16V	CCH1659(P35)
C 4233	(A,85,104)	CEHVW330M16
C 4234	(A,83,94)	CKSSYF104Z16
C 4235	(A,93,105)	CKSRYB473K50
C 4236	(A,71,86)	CEVW470M16
C 4302	(B,155,36)	CKSYB475K16
C 4303	(B,155,42)	CKSRYB103K50
C 4304	(B,152,36)	CKSRYB103K50
C 4306	(A,150,37)	CEVW470M6R3
C 4307	(A,142,37)	CEVW220M16
C 4308	(B,154,73)	CKSRYB103K50
C 4309	(A,149,65)	CEVW221M10
C 4310	(A,149,76)	CEVW221M10
C 4311	(A,151,81)	CKSRYB103K50
C 4316	(A,140,43)	CKSRYB103K50
C 4317	(A,141,49)	CKSRYB104K16
C 4410	(B,47,43)	CKSRYB105K10
C 4411	(B,44,43)	CKSRYB105K10
C 4412	(B,40,45)	CKSRYB105K10
C 4413	(B,40,43)	CKSRYB105K10
C 4415	(A,45,28)	CEVW100M16
C 4416	(A,38,28)	CEVW220M16
C 4500	(B,50,48)	CKSRYB105K6R3
C 4502	(B,50,50)	CKSRYB103K50
C 4503	(B,45,50)	CKSRYB103K50
C 4504	(B,42,53)	CCSRCH471J50
C 4505	(B,50,52)	CCSRCH221J50
C 4506	(B,45,52)	CCSRCH221J50
C 4507	(B,54,52)	CCSRCH471J50
C 4508	(B,46,58)	CKSRYF104Z25
C 4509	(B,42,55)	CKSRYB105K6R3
C 4510	(B,53,57)	CKSRYB105K6R3
C 4511	(A,53,62)	CEVW220M16
C 4601	(A,53,55)	CEVW101M16

MONI_PANEL Unit
Consists of
Monitor PCB
Keyboard PCB
Panel PCB

HIJ

Unit Number:CWM9920
Unit Name:MONI_PANEL Unit

MISCELLANEOUS

Circuit Symbol and No.		Part No.
IC 5001	(A,28,51) IC	TC90A64AF-P
IC 5026	(A,62,27) IC	TC7SH00FUS1
IC 5061	(A,24,70) IC	TC7SH08FUS1
IC 5151	(A,53,33) IC	NJM2138V
IC 5181	(A,44,17) IC	NJM082BV
IC 5331	(A,67,77) IC	OZ961ISN
IC 5333	(A,59,65) IC	TC7SH08FUS1
IC 5601	(A,91,53) IC	PE5479A
IC 5602	(A,79,43) IC	S-80835CNNB-B8U
IC 5651	(A,73,55) IC	S-29221BROI-J8T1
IC 5700	(A,87,102) IC	SBX3050-01
IC 5701	(A,88,90) IC	TC7SH08FUS1
IC 5702	(A,86,156) IC	TPS850
IC 5841	(A,140,25) IC	R1130H251B
IC 5851	(A,116,25) IC	BD6171KV
IC 5901	(A,37,80) IC	NJM2903V
Q 5002	(A,43,64) Transistor	2SC4617
Q 5101	(A,52,58) Transistor	2SC4617
Q 5102	(A,49,66) Transistor	2SA1774
Q 5103	(A,51,63) Transistor	2SC4617
Q 5151	(A,44,38) Transistor	UMZ1N
Q 5152	(A,39,35) Transistor	UMZ1N
Q 5153	(A,39,31) Transistor	UMZ1N
Q 5154	(A,54,26) Transistor	UMZ1N
Q 5155	(A,47,26) Transistor	UMZ1N
Q 5156	(A,39,26) Transistor	UMZ1N
Q 5182	(A,38,21) Transistor	UMX2N
Q 5183	(A,38,15) Transistor	UMT2N
Q 5331	(A,74,72) Transistor	2SC4617
Q 5332	(A,76,72) Transistor	DTA144EE
Q 5333	(A,80,75) FET	TS8M1
Q 5334	(A,80,79) FET	TS8M1
Q 5342	(A,63,73) Transistor	2SC4617
Q 5343	(A,60,73) Transistor	2SC4617
Q 5351	(A,54,82) Transistor	2SC4097
Q 5371	(A,65,62) Transistor	2SC4617
Q 5372	(A,68,61) Transistor	2SC4617
Q 5373	(A,68,65) Transistor	2SA1774
Q 5375	(A,75,67) Transistor	UMX2N
Q 5380	(A,71,64) Transistor	2SC4617
Q 5603	(A,86,40) Transistor	2SC4617
Q 5681	(A,68,9) Transistor	UMF5N
Q 5682	(A,68,13) Transistor	UMF5N
Q 5683	(A,72,8) Transistor	FMG12
Q 5701	(A,86,140) Transistor	2SC4617
Q 5702	(A,86,143) Transistor	2SA1774
Q 5703	(A,87,151) Transistor	2SA1774
Q 5831	(A,118,12) FET	RSQ035P03
Q 5832	(A,108,13) FET	RSQ035P03
D 5331	(A,73,75) Diode	UDZS6R2(B)
D 5332	(A,74,78) Diode	UDZS6R2(B)
D 5333	(A,83,71) Diode	MA147
D 5334	(A,82,69) Diode	MA147
D 5335	(A,79,69) Diode	UDZS5R6(B)
D 5336	(A,57,78) Diode	UDZS6R2(B)
D 5337	(A,62,83) Diode	RB751V40
D 5338	(A,57,83) Diode	UDZS5R6(B)
D 5371	(A,63,67) Diode	UDZS8R2(B)
D 5601	(A,108,40) Diode	RB500V-40
D 5611	(A,120,53) Diode	UDZS5R6(B)

Circuit Symbol and No.		Part No.
D 5612	(A,122,50) Diode	UMZ6R8N
D 5613	(A,118,49) Diode	UMZ6R8N
D 5614	(A,122,45) Diode	UMZ6R8N
D 5615	(A,118,44) Diode	UMZ6R8N
D 5681	(A,71,13) Diode	1SS355
D 5683	(A,9,22) Diode	UDZS5R6(B)
D 5684	(A,9,28) Diode	UDZS5R6(B)
D 5700	(A,8,9) LED	SML-310PT(KL)
D 5701	(A,18,9) LED	SML-310PT(KL)
D 5702	(A,75,13) LED	SML-310PT(KL)
D 5703	(A,41,8) LED	SML-310PT(KL)
D 5704	(A,32,8) LED	SML-310PT(KL)
D 5705	(A,50,8) LED	SML-310PT(KL)
D 5706	(A,75,3) LED	SML-310PT(KL)
D 5707	(A,86,4) LED	SML-310PT(KL)
D 5708	(A,8,164) LED	SML-310PT(KL)
D 5709	(A,75,164) LED	SML-310PT(KL)
D 5710	(A,18,164) LED	SML-310PT(KL)
D 5711	(A,86,13) LED	SML-310PT(KL)
D 5712	(A,85,164) LED	SML-310PT(KL)
D 5713	(A,32,165) LED	SML-310PT(KL)
D 5714	(A,64,10) LED	CL-190UB2-X
D 5715	(A,66,167) LED	CL-190UB2-X
D 5716	(A,50,165) LED	SML-310PT(KL)
D 5717	(A,66,4) LED	CL-190UB2-X
D 5718	(A,64,162) LED	CL-190UB2-X
D 5835	(A,136,25) Diode	RB500V-40
D 5851	(A,105,6) Diode	RB160M-30
D 5861	(A,119,7) Diode	RSX201L-30
D 5862	(A,105,17) Diode	RB548W
D 5863	(A,105,20) Diode	RB548W
D 5864	(A,116,34) Diode	RB548W
D 5865	(A,120,34) Diode	RB548W
D 5866	(A,123,34) Diode	RB548W
D 5901	(A,46,15) LED	SML-310PT(KL)
D 5902	(A,46,23) LED	SML-310PT(KL)
D 5903	(A,15,4) LED	SML-310PT(KL)
D 5904	(A,15,9) LED	SML-310PT(KL)
D 5905	(A,13,85) LED	SML-310PT(KL)
D 5906	(A,39,85) LED	SML-310PT(KL)
L 5001	(A,18,39) Inductor	CTF1306
L 5002	(A,22,37) Inductor	CTF1306
L 5003	(A,26,37) Inductor	CTF1306
L 5004	(A,28,38) Inductor	CTF1306
L 5005	(A,28,68) Inductor-Array	CTF1421
L 5006	(A,23,66) Inductor-Array	CTF1421
L 5008	(A,26,67) Inductor	CTF1306
L 5009	(A,23,37) Ferrite Bead	CTF1528
L 5011	(A,20,36) Inductor	CTF1306
L 5012	(A,25,37) Ferrite Bead	CTF1528
L 5013	(A,29,65) Ferrite Bead	CTF1528
L 5014	(A,24,64) Ferrite Bead	CTF1528
L 5015	(A,20,65) Inductor	CTF1306
L 5016	(A,16,48) Ferrite Bead	CTF1528
L 5071	(A,67,33) Inductor	LCKAW100J2520
L 5074	(A,43,42) Inductor	LCKBW1R0M2520
L 5075	(A,52,42) Inductor	LCKBW100K2520
L 5078	(A,50,46) Inductor	LCKAW100J2520
L 5079	(A,46,49) Inductor	CTF1306
L 5101	(A,130,5) Inductor	LCKAW100J2520

Circuit Symbol and No.		Part No.
L 5151	(A,59,17) Inductor	LCKAW100J2520
L 5152	(A,55,15) Inductor	LCKAW100J2520
L 5181	(A,55,12) Inductor	LCKAW101J2520
L 5182	(A,51,11) Inductor	LCKAW101J2520
L 5311	(A,51,76) Inductor	CTH1256
L 5601	(A,106,44) Inductor	LCKBW100K2520
L 5606	(A,107,50) Inductor	CTF1306
L 5607	(A,106,52) Inductor	CTF1306
L 5801	(A,20,32) Inductor	LCKAW100J2520
L 5802	(A,23,32) Inductor	LCKAW100J2520
L 5803	(A,27,32) Inductor	LCKAW100J2520
L 5804	(A,30,32) Inductor	LCKAW100J2520
L 5841	(A,139,15) Choke Coil 10µH	CTH1249
L 5843	(A,129,32) Inductor	CTF1635
L 5851	(A,123,12) Choke Coil 18µH	CTH1250
L 5852	(A,93,14) Choke Coil 10µH	CTH1259
L 5862	(A,103,13) Choke Coil 68µH	CTH1318
L 5863	(A,98,21) Inductor	DTL1096
L 5864	(A,98,9) Inductor	CTF1635
L 5865	(A,125,37) Inductor	CTF1635
L 5901	(A,45,73) Inductor	LCKAW100J2520
T 5331	(A,105,78) Transformer	CTT1119
TH5601	(A,77,7) Thermistor	CCX1051
X 5001	(A,34,69) Crystal Resonator 42MHz	CSS1604
X 5601	(A,89,40) Radiator 12.58MHz	CSS1601
S 5700	(A,69,6) Push Switch	CSG1155
S 5701	(A,62,6) Push Switch	CSG1126
S 5702	(A,53,8) Push Switch	CSG1155
S 5703	(A,29,8) Push Switch	CSG1155
S 5704	(A,16,6) Push Switch	CSG1155
S 5709	(A,77,166) Push Switch	CSG1155
S 5710	(A,86,166) Push Switch	CSG1155
S 5713	(A,80,8) Switch(SELECT)	CSX1075
S 5715	(A,29,165) Push Switch	CSG1155
S 5716	(A,16,167) Push Switch	CSG1155
S 5717	(A,6,167) Push Switch	CSG1155
S 5718	(A,6,6) Push Switch	CSG1155
S 5719	(A,62,166) Push Switch	CSG1126
S 5720	(A,55,166) Push Switch	CSG1155
S 5901	(A,9,85) Push Switch	CSG1126
S 5902	(A,44,85) Push Switch	CSG1126
VR5331	(A,69,83) Semi-fixed 15kΩ(B)	CCP1424

RESISTORS

R 5001	(A,27,36)	RS1/16S101J
R 5002	(A,21,35)	RS1/16S470J
R 5003	(A,29,36)	RS1/16S101J
R 5004	(A,33,35)	RS1/16S101J
R 5005	(A,44,45)	RS1/16S473J
R 5006	(A,47,46)	RS1/16S392J
R 5009	(A,44,62)	RS1/16S152J
R 5010	(A,42,67)	RS1/16S331J
R 5012	(A,32,64)	RS1/16S105J
R 5013	(A,34,65)	RS1/16S391J
R 5018	(A,22,68)	RS1/16S101J
R 5022	(A,20,67)	RS1/16S101J
R 5024	(A,14,60)	RS1/16S333J
R 5025	(A,16,39)	RS1/16S101J
R 5026	(A,30,36)	RS1/16S0R0J

Circuit Symbol and No.		Part No.
R 5027	(A,17,31)	RS1/16S101J
R 5028	(A,64,24)	RS1/16S101J
R 5029	(A,65,28)	RS1/16S102J
R 5030	(A,18,35)	RS1/16S101J
R 5037	(A,25,82)	RS1/16S472J
R 5038	(A,27,82)	RS1/16S473J
R 5039	(A,15,39)	RS1/16S101J
R 5040	(A,24,82)	RS1/16S473J
R 5061	(A,20,71)	RS1/16S473J
R 5101	(A,52,55)	RS1/16S1502F
R 5102	(A,49,56)	RS1/16S1003F
R 5103	(A,49,58)	RS1/16S681J
R 5104	(A,51,60)	RS1/16S331J
R 5105	(A,52,66)	RS1/16S0R0J
R 5107	(A,52,51)	RS1/16S392J
R 5108	(A,52,60)	RS1/16S331J
R 5109	(A,49,64)	RS1/16S391J
R 5110	(A,52,65)	RS1/16S391J
R 5150	(A,39,28)	RS1/16S183J
R 5152	(A,48,35)	RS1/16S3901F
R 5153	(A,45,35)	RS1/16S1501F
R 5154	(A,54,30)	RS1/16S102J
R 5155	(A,51,30)	RS1/16S102J
R 5156	(A,45,31)	RS1/16S1501F
R 5157	(A,48,30)	RS1/16S3901F
R 5160	(A,58,33)	RS1/16S1002F
R 5161	(A,60,30)	RS1/16S1802F
R 5162	(A,57,30)	RS1/16S102J
R 5163	(A,53,38)	RS1/16S3901F
R 5164	(A,50,38)	RS1/16S1501F
R 5165	(A,47,38)	RS1/16S102J
R 5166	(A,41,38)	RS1/16S272J
R 5167	(A,42,35)	RS1/16S102J
R 5168	(A,37,35)	RS1/16S272J
R 5169	(A,42,31)	RS1/16S102J
R 5170	(A,37,31)	RS1/16S272J
R 5171	(A,52,27)	RS1/16S331J
R 5172	(A,56,24)	RS1/16S103J
R 5174	(A,44,27)	RS1/16S331J
R 5175	(A,48,24)	RS1/16S103J
R 5177	(A,36,26)	RS1/16S331J
R 5178	(A,40,24)	RS1/16S103J
R 5180	(A,35,29)	RS1/16S243J
R 5181	(A,42,23)	RS1/16S3002F
R 5182	(A,47,22)	RS1/16S223J
R 5183	(A,45,22)	RS1/16S1203F
R 5184	(A,47,19)	RS1/16S1602F
R 5185	(A,48,14)	RS1/16S1502F
R 5186	(A,42,21)	RS1/16S1002F
R 5187	(A,42,18)	RS1/16S1002F
R 5188	(A,41,16)	RS1/16S101J
R 5189	(A,36,19)	RS1/16S153J
R 5190	(A,40,21)	RS1/16S100J
R 5191	(A,36,14)	RS1/16S153J
R 5192	(A,41,14)	RS1/16S100J
R 5193	(A,38,13)	RS1/16S0R0J
R 5194	(A,39,18)	RS1/16S0R0J
R 5331	(A,57,72)	RS1/16S105J
R 5332	(A,71,73)	RS1/16S473J
R 5333	(A,78,72)	RS1/16S183J

Circuit Symbol and No.		Part No.
R 5334	(A,71,69)	RS1/16S102J
R 5335	(A,59,70)	RS1/16S102J
R 5336	(A,79,72)	RS1/16S513J
R 5337	(A,61,79)	RS1/16S105J
R 5338	(A,74,75)	RS1/16S103J
R 5339	(A,66,83)	RS1/16S563J
R 5340	(A,73,79)	RS1/16S103J
R 5342	(A,78,69)	RS1/16S511J
R 5343	(A,79,66)	RS1/16S821J
R 5344	(A,57,74)	RS1/16S473J
R 5350	(A,60,61)	RS1/16S471J
R 5351	(A,57,81)	RS1/16S332J
R 5360	(A,57,75)	RS1/16S104J
R 5361	(A,57,77)	RS1/16S103J
R 5371	(A,63,64)	RS1/16S101J
R 5372	(A,71,62)	RS1/16S103J
R 5373	(A,73,65)	RS1/16S471J
R 5374	(A,72,67)	RS1/16S101J
R 5375	(A,64,64)	RS1/16S104J
R 5376	(A,67,67)	RS1/16S103J
R 5377	(A,68,63)	RS1/16S473J
R 5378	(A,71,66)	RS1/16S101J
R 5379	(A,63,61)	RS1/16S824J
R 5602	(A,103,56)	RS1/16S471J
R 5603	(A,110,52)	RS1/16S473J
R 5604	(A,107,49)	RS1/16S471J
R 5605	(A,104,59)	RS1/16S471J
R 5606	(A,103,53)	RAB4CQ471J
R 5607	(A,103,57)	RS1/16S471J
R 5608	(A,102,50)	RS1/16S471J
R 5609	(A,102,47)	RS1/16S471J
R 5610	(A,89,64)	RS1/16S471J
R 5611	(A,94,64)	RS1/16S470J
R 5612	(A,92,64)	RS1/16S470J
R 5613	(A,96,64)	RS1/16S272J
R 5614	(A,91,64)	RS1/16S272J
R 5619	(A,93,39)	RS1/16S473J
R 5621	(A,93,40)	RS1/16S223J
R 5622	(A,84,38)	RS1/16S473J
R 5623	(A,97,64)	RS1/16S473J
R 5624	(A,104,61)	RAB4CQ473J
R 5625	(A,79,46)	RS1/16S473J
R 5626	(A,75,50)	RS1/16S473J
R 5627	(A,101,43)	RAB4CQ473J
R 5628	(A,81,44)	RS1/16S0R0J
R 5629	(A,101,45)	RS1/16S1502D
R 5630	(A,97,42)	RAB4CQ471J
R 5631	(A,30,76)	RS1/16S104J
R 5632	(A,30,77)	RS1/16S104J
R 5633	(A,30,79)	RS1/16S104J
R 5634	(A,30,81)	RS1/16S473J
R 5637	(A,84,39)	RS1/16S471J
R 5642	(A,79,51)	RS1/16S473J
R 5646	(A,77,51)	RS1/16S473J
R 5651	(A,79,56)	RAB4CQ471J
R 5652	(A,79,53)	RS1/16S471J
R 5655	(A,80,59)	RS1/16S473J
R 5657	(A,94,37)	RS1/16S0R0J
R 5659	(A,79,58)	RS1/16S222J
R 5681	(A,9,26)	RS1/16S104J

Circuit Symbol and No.		Part No.
R 5682	(A,9,21)	RS1/16S104J
R 5683	(A,74,12)	RS1/16S102J
R 5684	(A,75,12)	RS1/16S102J
R 5685	(A,66,7)	RS1/16S103J
R 5686	(A,66,10)	RS1/16S103J
R 5687	(A,66,12)	RS1/16S103J
R 5688	(A,66,15)	RS1/16S103J
R 5700	(A,85,91)	RS1/16S470J
R 5701	(A,88,85)	RS1/16S470J
R 5702	(A,11,12)	RS1/16SS101J
R 5703	(A,48,11)	RS1/16SS101J
R 5704	(A,49,4)	RS1/16SS101J
R 5705	(A,74,163)	RS1/16SS101J
R 5706	(A,89,158)	RS1/16SS121J
R 5707	(A,38,164)	RS1/16SS101J
R 5708	(A,51,13)	RS1/16SS821J
R 5709	(A,70,12)	RS1/16S393J
R 5710	(A,67,12)	RS1/16S203J
R 5711	(A,62,12)	RS1/16S123J
R 5712	(A,72,9)	RS1/16S124J
R 5713	(A,72,6)	RS1/16S393J
R 5714	(A,82,166)	RS1/16S203J
R 5715	(A,81,167)	RS1/16S123J
R 5716	(A,11,165)	RS1/16S124J
R 5717	(A,20,165)	RS1/16S393J
R 5718	(A,36,167)	RS1/16S203J
R 5719	(A,57,167)	RS1/16S123J
R 5720	(A,72,13)	RS1/16S124J
R 5721	(A,88,141)	RS1/16S472J
R 5722	(A,88,144)	RS1/16S223J
R 5724	(A,11,7)	RS1/16S124J
R 5725	(A,20,8)	RS1/16S393J
R 5726	(A,38,6)	RS1/16S203J
R 5727	(A,41,6)	RS1/16S123J
R 5731	(A,89,154)	RS1/16SS121J
R 5732	(A,71,165)	RS1/16SS821J
R 5733	(A,37,165)	RS1/16SS101J
R 5734	(A,89,149)	RS1/16S104J
R 5735	(A,87,153)	RS1/16S124J
R 5736	(A,88,156)	RS1/16SS121J
R 5737	(A,88,138)	RS1/16S473J
R 5738	(A,89,152)	RS1/16S103J
R 5739	(A,86,138)	RS1/16S473J
R 5740	(A,35,164)	RS1/16SS101J
R 5741	(A,75,162)	RS1/16SS101J
R 5742	(A,51,3)	RS1/16SS101J
R 5743	(A,49,11)	RS1/16SS101J
R 5744	(A,11,11)	RS1/16SS101J
R 5745	(A,85,161)	RS1/16SS101J
R 5746	(A,34,166)	RS1/16SS101J
R 5747	(A,78,163)	RS1/16SS820J
R 5748	(A,53,3)	RS1/16SS820J
R 5749	(A,50,11)	RS1/16SS820J
R 5750	(A,11,10)	RS1/16SS820J
R 5751	(A,83,162)	RS1/16SS101J
R 5752	(A,72,167)	RS1/16SS681J
R 5753	(A,52,12)	RS1/16SS681J
R 5802	(A,17,22)	RS1/16S0R0J
R 5803	(A,35,21)	RS1/16S333J
R 5802	(A,17,22)	RS1/16S0R0J

Circuit Symbol and No.		Part No.
R 5803	(A,35,21)	RS1/16S333J
R 5804	(A,51,24)	RS1/16S0R0J
R 5805	(A,45,24)	RS1/16S0R0J
R 5806	(A,35,26)	RS1/16S0R0J
R 5835	(A,142,21)	RS1/16S684J
R 5840	(A,127,37)	RS1/16S0R0J
R 5861	(A,124,21)	RS1/16S333J
R 5862	(A,130,26)	RS1/16S1001D
R 5863	(A,125,25)	RS1/16S182J
R 5864	(A,128,26)	RS1/16S682J
R 5865	(A,132,25)	RS1/16S201J
R 5866	(A,133,26)	RS1/16S6801F
R 5867	(A,123,28)	RS1/16S2001F
R 5868	(A,125,29)	RS1/16S5100F
R 5869	(A,128,22)	RS1/16S102J
R 5870	(A,128,18)	RS1/16S1001D
R 5871	(A,130,22)	RS1/16S1600D
R 5872	(A,131,20)	RS1/16S2700D
R 5873	(A,108,22)	RS1/16S3303D
R 5874	(A,108,23)	RS1/16S1802F
R 5875	(A,105,23)	RS1/16S821J
R 5876	(A,109,25)	RS1/16S5102D
R 5877	(A,125,34)	RS1/16S2202F
R 5878	(A,124,32)	RS1/16S1802F
R 5879	(A,121,31)	RS1/16S1002F
R 5880	(A,115,16)	RS1/16S563J
R 5881	(A,77,37)	RS1/16S0R0J
R 5883	(A,81,37)	RS1/16S0R0J
R 5884	(A,117,17)	RS1/16S150J
R 5885	(A,121,18)	RS1/16S150J
R 5886	(A,124,17)	RS1/16S273J
R 5890	(A,123,25)	RS1/16S684J
R 5901	(A,40,77)	RS1/16S103J
R 5902	(A,40,74)	RS1/16S103J
R 5903	(A,33,83)	RS1/16S392J
R 5904	(A,34,83)	RS1/16S912J
R 5905	(A,33,80)	RS1/16S2703F
R 5906	(A,40,84)	RS1/16S153J
R 5907	(A,38,83)	RS1/16S153J
R 5951	(A,43,15)	RS1/16S471J
R 5952	(A,31,19)	RS1/16S471J
R 5953	(A,15,80)	RS1/10S911J
R 5954	(A,33,78)	RS1/10S911J
R 5955	(A,40,15)	RS1/16S471J
R 5956	(A,34,19)	RS1/16S471J
R 5957	(A,19,80)	RS1/10S102J
R 5958	(A,30,77)	RS1/10S102J
R 5959	(A,37,15)	RS1/16S471J
R 5960	(A,37,19)	RS1/16S471J

CAPACITORS

C 5001	(A,20,38)	CKSRYB105K6R3
C 5002	(A,24,38)	CKSSYF104Z16
C 5003	(A,31,38)	CKSSYF104Z16
C 5004	(A,33,38)	CKSSYF104Z16
C 5005	(A,32,37)	CKSSYF104Z16
C 5006	(A,34,38)	CKSSYF104Z16
C 5007	(A,36,38)	CKSSYF104Z16
C 5008	(A,39,37)	CKSSYF104Z16
C 5009	(A,40,38)	CKSSYF104Z16

Circuit Symbol and No.		Part No.
C 5010	(A,39,40)	CKSSYF104Z16
C 5011	(A,41,43)	CKSSYF104Z16
C 5012	(A,40,44)	CKSSYF104Z16
C 5013	(A,42,46)	CKSRYB392K50
C 5015	(A,44,47)	CKSRYB105K6R3
C 5016	(A,40,48)	CKSSYF104Z16
C 5017	(A,41,49)	CKSSYF104Z16
C 5018	(A,44,50)	CKSRYB104K50
C 5019	(A,44,51)	CKSRYB104K50
C 5020	(A,44,54)	CKSRYB104K50
C 5021	(A,40,52)	CKSSYF104Z16
C 5022	(A,46,57)	CKSSYF104Z16
C 5023	(A,45,57)	CKSSYF104Z16
C 5024	(A,44,57)	CKSSYF104Z16
C 5025	(A,41,53)	CKSSYF104Z16
C 5026	(A,41,54)	CKSSYF104Z16
C 5027	(A,41,55)	CKSSYF104Z16
C 5028	(A,41,56)	CKSSYF104Z16
C 5029	(A,41,57)	CKSSYF104Z16
C 5030	(A,44,60)	CKSRYB104K50
C 5031	(A,43,57)	CKSSYF104Z16
C 5032	(A,41,58)	CKSSYF104Z16
C 5033	(A,41,59)	CKSSYF104Z16
C 5034	(A,41,60)	CKSSYF104Z16
C 5035	(A,43,66)	CKSRYB103K50
C 5036	(A,45,64)	CCSRCH4R0C50
C 5037	(A,39,62)	CKSSYF104Z16
C 5040	(A,39,63)	CKSSYF104Z16
C 5042	(A,37,64)	CCSRCH181J50
C 5045	(A,36,67)	CCSRCH9R0D50
C 5046	(A,33,66)	CCSRCH9R0D50
C 5047	(A,30,63)	CKSSYF104Z16
C 5048	(A,29,64)	CKSSYF104Z16
C 5049	(A,24,63)	CKSSYF104Z16
C 5050	(A,20,64)	CKSRYB105K6R3
C 5051	(A,16,55)	CKSSYF104Z16
C 5052	(A,16,47)	CKSSYF104Z16
C 5054	(A,24,34)	CCSRCH101J50
C 5055	(A,15,61)	CKSRYB104K50
C 5056	(A,18,68)	CCSRCH271J50
C 5057	(A,32,35)	CCSSCH220J50
C 5061	(A,21,71)	CKSRYB104K50
C 5063	(A,62,29)	CKSRYB104K50
C 5065	(A,61,25)	CCSRCH120J50
C 5071	(A,56,42)	CSZS100M10
C 5074	(A,45,41)	CKSRYB105K6R3
C 5075	(A,54,41)	CKSRYB105K6R3
C 5076	(A,48,42) 68µF/6.3V	CCH1440
C 5081	(A,57,49)	CCSRCH101J50
C 5082	(A,57,50)	CCSRCH101J50
C 5083	(A,57,52)	CCSRCH101J50
C 5101	(A,51,49)	CKSYF106Z10
C 5102	(A,49,60)	CCSRCH470J50
C 5103	(A,49,62)	CCSRCH470J50
C 5104	(A,52,56)	CKSRYB104K50
C 5105	(A,50,53)	CSZS100M10
C 5151	(A,63,33)	CSZSR220M16
C 5152	(A,48,32)	CKSRYB103K50
C 5153	(A,47,35)	CCSRCH4R0C50
C 5154	(A,47,30)	CCSRCH4R0C50

Circuit Symbol and No.		Part No.
C 5155	(A,52,38)	CCSRCH4R0C50
C 5156	(A,60,33)	CKSRYB104K50
C 5160	(A,44,35)	CKSRYB104K50
C 5161	(A,44,31)	CKSRYB104K50
C 5162	(A,49,38)	CKSRYB104K50
C 5163	(A,57,28)	CKSRYB105K6R3
C 5164	(A,50,28)	CKSRYB105K6R3
C 5165	(A,42,28)	CKSRYB105K6R3
C 5166	(A,36,28)	CKSRYB104K50
C 5167	(A,47,28)	CKSRYB104K50
C 5168	(A,54,28)	CKSRYB104K50
C 5169	(A,35,31)	CKSRYB103K50
C 5170	(A,55,18)	CSZSR220M16
C 5171	(A,55,22)	CSZSR220M16
C 5181	(A,51,20)	CSZSR220M16
C 5182	(A,48,19)	CKSRYB104K50
C 5183	(A,51,15)	CSZSR4R7M25
C 5184	(A,48,16)	CKSRYB104K50
C 5186	(A,48,22)	CKSRYB104K50
C 5188	(A,47,16)	CKSRYB104K50
C 5311	(A,47,83) 10µF	DCH1165
C 5332	(A,49,83) 10µF	DCH1165
C 5334	(A,58,83)	CKSRYB104K50
C 5335	(A,52,83)	CKSQYB105K16
C 5336	(A,60,70)	CKSRYB104K50
C 5337	(A,61,75)	CKSQYB105K16
C 5339	(A,65,70)	CKSQYB105K16
C 5340	(A,69,72)	CKSRYB562K50
C 5341	(A,69,69)	CKSRYB152K50
C 5343	(A,62,82)	CKSRYB473K25
C 5344	(A,65,83)	CFHXSQ221J50
C 5345	(A,71,81)	CKSRYB473K25
C 5346	(A,61,77)	CKSRYB103K50
C 5347	(A,77,83) 10µF	DCH1165
C 5348	(A,75,83) 10µF	DCH1165
C 5349	(A,86,72)	CKSQYB105K16
C 5350	(A,88,72)	CKSQYB105K16
C 5351	(A,120,69) 15pF	CCG1194
C 5352	(A,81,72)	CKSRYB153K25
C 5353	(A,67,69)	CKSRYB104K50
C 5354	(A,84,75)	CKSRYB104K50
C 5355	(A,84,78)	CKSRYB104K50
C 5356	(A,63,70)	CKSRYB474K10
C 5357	(A,59,68)	CKSRYF104Z50
C 5371	(A,66,65)	CKSRYF104Z50
C 5372	(A,69,65)	CKSRYF104Z50
C 5601	(A,105,40)	CSZSR330M10
C 5602	(A,93,43)	CKSRYB104K50
C 5603	(A,77,44)	CKSRYB104K50
C 5604	(A,83,44)	CKSRYB105K6R3
C 5605	(A,88,43)	CKSRYB104K50
C 5614	(A,124,43)	CKSRYB222K50
C 5615	(A,114,45)	CKSRYB222K50
C 5616	(A,116,46)	CKSRYB222K50
C 5617	(A,114,49)	CKSRYB222K50
C 5618	(A,115,50)	CKSRYB222K50
C 5619	(A,122,53)	CKSRYB223K50
C 5621	(A,13,27)	CCSRCH102J50
C 5622	(A,13,26)	CCSRCH102J50
C 5623	(A,9,20)	CCSRCH102J50

Circuit Symbol and No.		Part No.
C 5624	(A,8,24)	CCSRCH102J50
C 5625	(A,103,64)	CKSRYB222K50
C 5626	(A,11,54)	CKSRYB222K50
C 5627	(A,100,61)	CKSRYB222K50
C 5628	(A,102,61)	CKSRYB222K50
C 5651	(A,73,60)	CKSRYB104K50
C 5670	(A,77,8)	CKSRYF104Z50
C 5685	(A,75,15)	CCSRCH102J50
C 5686	(A,74,15)	CCSRCH102J50
C 5687	(A,69,6)	CKSRYB105K6R3
C 5700	(A,86,96)	CKSRYB105K6R3
C 5701	(A,70,167)	CKSRYB104K50
C 5702	(A,64,11)	CKSRYB104K50
C 5703	(A,87,87)	CKSRYB104K50
C 5704	(A,87,148)	CKSQYB475K6R3
C 5705	(A,85,158)	CKSSYF104Z16
C 5801	(A,21,27)	CSZSR4R7M25
C 5802	(A,20,23)	CKSRYB104K50
C 5803	(A,25,27)	CSZS100M10
C 5804	(A,23,23)	CKSRYB104K50
C 5805	(A,28,27)	CSZSR330M10
C 5806	(A,27,24)	CKSRYB104K50
C 5807	(A,31,27)	CSZSR33M35
C 5808	(A,30,24)	CKSRYB473K25
C 5809	(A,21,32)	CKSSYF104Z16
C 5810	(A,25,32)	CKSSYF104Z16
C 5819	(A,123,17)	CKSRYB104K50
C 5820	(A,125,21)	CCSRCH101J50
C 5821	(A,125,19)	CKSRYB103K50
C 5822	(A,131,32)	CKSRYB104K50
C 5823	(A,122,30)	CKSRYB393K16
C 5824	(A,116,31)	CKSRYB102K50
C 5825	(A,125,31)	CKSRYB105K6R3
C 5828	(A,115,17)	CKSRYB104K50
C 5829	(A,118,17)	CKSRYB102K50
C 5830	(A,119,17)	CKSRYB105K6R3
C 5831	(A,28,32)	CKSSYF104Z16
C 5832	(A,32,32)	CKSRYB473K25
C 5836	(A,139,19)	CSZS100M16
C 5841	(A,139,21)	CKSRYF105Z10
C 5842	(A,136,20)	CKSRYB104K50
C 5843	(A,140,31)	CSZS100M10
C 5844	(A,140,32)	CKSRYB104K50
C 5845	(A,140,29)	CKSRYB104K50
C 5852	(A,101,6) 33µF/10V	CCH1586
C 5854	(A,99,6)	CKSRYB104K50
C 5860	(A,116,10)	CKSRYB103K50
C 5861	(A,128,6)	CKSRYB104K50
C 5862	(A,116,7) 10µF	DCH1165
C 5863	(A,112,7) 10µF	DCH1165
C 5864	(A,109,7) 10µF	DCH1165
C 5865	(A,111,13)	CKSRYB103K50
C 5866	(A,128,28)	CKSRYB104K50
C 5867	(A,112,18)	CKSRYB105K6R3
C 5868	(A,112,19)	CKSRYB103K50
C 5869	(A,108,17)	CKSRYB472K50
C 5870	(A,108,19)	CKSRYB472K50
C 5873	(A,112,30)	CKSSYF104Z16
C 5875	(A,102,19)	CKSRYB104K50
C 5876	(A,102,17)	CKSQYF105Z25

Circuit Symbol and No.		Part No.
C 5877	(A,102,20)	CKSQYF105Z25
C 5881	(A,96,7)	CKSQYF105Z25
C 5882	(A,96,19)	CKSQYF105Z25
C 5883	(A,129,37)	CKSQYF105Z25
C 5884	(A,109,28)	CKSRYB103K50
C 5885	(A,125,6) 68µF/6.3V	CCH1440
C 5886	(A,107,26)	CKSYF475Z16
C 5887	(A,114,33)	CKSRYF474Z16
C 5888	(A,118,33)	CKSRYF474Z16
C 5889	(A,121,33)	CKSRYF474Z16
C 5890	(A,116,37)	CKSQYF105Z25
C 5891	(A,119,37)	CKSQYF105Z25
C 5892	(A,121,37)	CKSQYF225Z16
C 5893	(A,123,37)	CKSQYF225Z16
C 5894	(A,133,28)	CKSQYF105Z25
C 5895	(A,125,27)	CKSRYB393K16
C 5896	(A,129,30)	CSZS100M16
C 5897	(A,130,23)	CKSRYB473K25
C 5898	(A,128,20)	CCSRCH331J50
C 5899	(A,128,25)	CKSRYB103K50
C 5900	(A,125,23)	CKSRYB393K16
C 5901	(A,40,82)	CKSRYB104K50
C 5902	(A,37,75)	CSZSR330M10
C 5903	(A,34,76)	CFHXSQ562J16
C 5904	(A,45,77)	CSZSR330M10
C 5905	(A,36,83)	CCSRCH102J50

K

Unit Number:CWM9921
Unit Name:Connector Unit

MISCELLANEOUS

D 2801	(A,25,25) Diode	UDZS5R6(B)
D 2802	(B,24,26) Diode	UDZS5R6(B)
D 2803	(A,25,20) Diode	HZU12(B2)
D 2804	(A,25,23) Diode	HZU12(B2)
D 2805	(A,38,28) Diode	UMZ6R8N
D 2806	(A,25,32) Diode	UMZ6R8N
D 2807	(A,48,14) Diode	UMZ6R8N
D 2809	(A,48,10) Diode	UMZ6R8N
D 2811	(A,53,10) Diode	UMZ6R8N
D 2812	(A,53,14) Diode	UMZ6R8N
D 2813	(B,44,23) Diode	UDZS5R6(B)
D 2814	(B,44,29) Diode	UDZS5R6(B)
L 2801	(A,36,8) Inductor	CTF1334
L 2802	(A,34,8) Inductor	CTF1334
L 2803	(A,33,8) Inductor	CTF1334
L 2804	(A,31,8) Inductor	CTF1334
⚠FU2802	(A,21,7) Fuse 4A	CEK1260
EF2801	(A,25,30) EMI Filter	CCG1067

RESISTORS

R 2801	(A,31,26)	RS1/16S102J
R 2802	(A,33,26)	RS1/16S102J
R 2803	(A,31,22)	RS1/16S0R0J
R 2804	(A,33,22)	RS1/16S102J
R 2811	(A,38,24)	RS1/10S0R0J
R 2812	(A,38,21)	RS1/10S0R0J
R 2813	(A,43,10)	RS1/16S102J

Circuit Symbol and No.		Part No.
R 2814	(A,22,19)	RS1/16S0R0J

CAPACITORS

C 2801	(A,19,19)	CKSRYB102K50
C 2802	(A,20,19)	CKSRYB102K50
C 2804	(A,17,19)	CKSRYB102K50
C 2809	(A,55,6)	CCSRCH101J50
C 2810	(A,50,6)	CKSQYF104Z50

L

Unit Number:CZW3097
Unit Name:Main PCB Unit

MISCELLANEOUS

IC 1	IC	BA6288FS
IC 2	IC	S-812C50AMC-C3E
IC 3	IC	TC7W14FU
IC 4	Photo-interrupter	GP2L24B
IC 5	Photo-interrupter	GP2L24B
Q 1	Transistor	2SB1185
Q 2	Transistor	IMX1
D 1	Diode	HZU6R2(B2)
L 2	Inductor	LCTAW2R2J2520
FU1	Fuse 2A	CEK1304

RESISTORS

R 1		RS1/16S223J
R 2		RS1/8S271J
R 3		RS1/16S332J
R 4		RS1/16S471J
R 5		RS1/16S222J
R 11		RS1/10S0R0J
R 12		RS1/16S222J
R 13		RS1/16S222J
R 14		RS1/16S821J
R 15		RS1/16S821J
R 19		RS1/16S102J
R 20		RS1/16S102J
R 21		RS1/16S102J
R 22		RS1/16S102J

CAPACITORS

C 1		CKSRYB153K50
C 2		CZC5169
C 3		CKSRYB105K10
C 7		CEVW100M16
C 8		CKSRYB104K50
C 9		CKSRYB473K50
C 10		CKSRYB473K50
C 11		CEVW100M16
C 12		CEVW100M16
C 13		CKSRYB104K50
C 14		CKSRYB104K50

C

Unit Number:CWX3178
Unit Name:DVD Core Unit (MS3R)

Circuit Symbol and No.		Part No.

MISCELLANEOUS

IC 401	(A,16,29) IC	PE5430A
IC 402	(A,4,39) IC	S-80827CNNB-B8M
IC 404	(A,4,36) IC	TC7S08F
IC 601	(B,11,18) IC	BA033FP
IC 602	(B,10,71) IC	BA18BC0FP
IC 1101	(A,15,82) IC	AN8703FH
IC 1201	(A,46,39) IC	BA5985FM
IC 1202	(A,45,56) IC	BA6859AFP-Y
IC 1301	(A,16,56) IC	MNZS26EDCUB
Q 1101	(B,36,104) Transistor	2SB1260
Q 1102	(B,36,98) Transistor	2SB1260
Q 1103	(B,25,105) Transistor	UN2211
Q 1104	(A,24,105) Transistor	2SB709A
Q 1105	(A,27,105) Transistor	2SD601A
D 1101	(B,33,104) Diode	1SS355
D 1102	(B,33,96) Diode	1SS355
D 1301	(B,25,55) Diode	UDZ2R7(B)
D 1302	(B,9,81) Chip LED	CL205IRXTU
L 401	(A,9,17) Inductor	CTF1395
L 402	(A,4,33) Inductor	CTF1410
L 1301	(B,15,55) Inductor	CTF1409
L 1302	(B,8,40) Inductor	CTF1409
L 1303	(B,15,58) Inductor	CTF1395
L 1305	(B,6,70) Inductor	CTF1409
X 401	(A,4,29) Ceramic Resonator 16.000MHz	CSS1576
X 1301	(A,33,64) Ceramic Resonator 16.934MHz	CSS1603

RESISTORS

R 401	(A,28,23)	RS1/16SS104J
R 403	(A,41,26)	RS1/16SS473J
R 404	(B,6,36)	RS1/16SS473J
R 405	(B,6,38)	RS1/16SS105J
R 406	(B,11,31)	RS1/16SS103J
R 407	(A,2,20)	RS1/16SS104J
R 410	(A,26,39)	RS1/16SS473J
R 414	(A,27,27)	RS1/16SS473J
R 415	(A,19,15)	RS1/16S1002D
R 418	(A,32,23)	RS1/16SS473J
R 419	(A,28,24)	RS1/16SS221J
R 420	(A,29,27)	RS1/16SS103J
R 421	(A,29,28)	RS1/16SS103J
R 423	(A,29,30)	RS1/16SS103J
R 424	(A,26,32)	RS1/16SS221J
R 427	(A,29,25)	RS1/16SS103J
R 433	(B,7,63)	RS1/16SS473J
R 434	(A,27,22)	RS1/16SS223J
R 435	(A,26,23)	RS1/16SS222J
R 436	(A,33,30)	RS1/16SS101J
R 437	(A,33,31)	RS1/16SS101J
R 601	(B,7,64)	RS1/16SS102J
R 603	(A,4,19)	RS1/16SS820J
R 604	(A,8,10)	RS1/16SS820J
R 605	(A,9,10)	RS1/16SS820J
R 606	(A,10,10)	RS1/16SS220J
R 607	(A,11,10)	RS1/16SS103J
R 608	(A,19,11)	RS1/16SS101J
R 612	(B,9,10)	RAB4CQ820J

Circuit Symbol and No.		Part No.
R 615	(B,11,10)	RAB4CQ220J
R 616	(B,19,11)	RAB4CQ220J
R 617	(B,21,14)	RAB4CQ220J
R 618	(B,24,11)	RAB4CQ220J
R 620	(A,14,11)	RS1/16SS103J
R 625	(A,5,19)	RS1/16SS220J
R 626	(A,4,22)	RS1/16SS820J
R 627	(A,7,19)	RS1/16SS220J
R 629	(B,7,13)	RS1/16SS103J
R 1101	(A,24,97)	RS1/16SS101J
R 1102	(B,40,101)	RS1/16SS3R9J
R 1103	(B,42,101)	RS1/16SS3R9J
R 1104	(B,42,102)	RS1/16SS3R9J
R 1105	(B,40,102)	RS1/16SS3R9J
R 1106	(A,21,97)	RS1/16SS330J
R 1107	(B,40,97)	RS1/16SS3R9J
R 1108	(B,40,98)	RS1/16SS3R9J
R 1109	(B,40,99)	RS1/16SS3R9J
R 1110	(B,40,100)	RS1/16SS3R9J
R 1111	(B,17,104)	RS1/16SS272J
R 1112	(B,18,104)	RS1/16SS472J
R 1113	(B,23,103)	RS1/16SS102J
R 1124	(A,5,85)	RS1/16SS273J
R 1125	(A,5,84)	RS1/16SS273J
R 1126	(A,6,81)	RS1/16SS224J
R 1133	(A,6,79)	RS1/16S2402D
R 1134	(A,6,77)	RS1/16S1002D
R 1135	(A,2,77)	RS1/16S2702D
R 1140	(A,23,83)	RS1/16SS105J
R 1141	(A,25,85)	RS1/16SS105J
R 1142	(B,17,80)	RS1/16SS105J
R 1151	(B,17,93)	RS1/16SS103J
R 1152	(B,13,90)	RS1/16SS103J
R 1201	(A,41,49)	RS1/16SS221J
R 1202	(A,38,45)	RS1/16SS393J
R 1203	(A,39,45)	RS1/16SS303J
R 1205	(B,44,43)	RS1/16SS0R0J
R 1206	(B,46,44)	RS1/16SS102J
R 1209	(B,46,38)	RS1/16SS221J
R 1210	(B,50,42)	RS1/16SS393J
R 1211	(B,51,44)	RS1/16SS393J
R 1212	(B,50,45)	RS1/16SS393J
R 1213	(A,53,47)	RS1/16SS393J
R 1214	(B,44,47)	RS1/16SS221J
R 1219	(A,51,50)	RS1/16SS221J
R 1220	(B,46,39)	RS1/16SS221J
R 1221	(A,51,60)	RS1/16S1802D
R 1222	(A,27,79)	RS1/16SS221J
R 1223	(A,47,64)	RS1/16SS2R2J
R 1224	(A,48,64)	RS1/16SS2R2J
R 1228	(A,49,64)	RS1/16SS2R2J
R 1231	(B,15,7)	RS1/16SS822J
R 1232	(B,14,7)	RS1/16SS822J
R 1233	(B,13,8)	RS1/16SS822J
R 1234	(B,15,10)	RS1/16SS563J
R 1235	(B,14,10)	RS1/16SS243J
R 1236	(B,13,10)	RS1/16SS683J
R 1238	(A,50,64)	RS1/16SS2R2J
R 1239	(A,51,64)	RS1/16SS2R2J
R 1241	(A,15,11)	RS1/16SS822J

Circuit Symbol and No.		Part No.
R 1242	(B,17,8)	RS1/16SS243J
R 1243	(B,12,84)	RS1/16S391J
R 1244	(B,9,84)	RS1/16S471J
R 1245	(B,19,97)	RS1/16SS105J
R 1301	(B,18,55)	RS1/16SS222J
R 1323	(B,21,47)	RS1/16SS221J
R 1324	(B,22,47)	RS1/16SS221J
R 1334	(A,34,45)	RS1/16SS221J
R 1338	(B,26,57)	RS1/16SS472J
R 1339	(A,32,56)	RS1/16SS273J
R 1340	(B,26,58)	RS1/16SS472J
R 1341	(A,32,57)	RS1/16SS273J
R 1342	(A,34,57)	RS1/16SS273J
R 1344	(A,32,58)	RS1/16SS273J
R 1349	(B,27,64)	RS1/16SS562J
R 1350	(B,27,63)	RS1/16SS242J
R 1352	(B,24,64)	RS1/16S2702D
R 1353	(A,28,72)	RS1/16SS102J
R 1360	(B,21,65)	RS1/16SS153J
R 1361	(B,18,65)	RS1/16SS105J
R 1362	(A,7,75)	RS1/16SS473J
R 1363	(A,3,75)	RS1/16SS101J
R 1364	(A,7,74)	RS1/16SS123J
R 1365	(A,4,74)	RS1/16SS101J
R 1367	(B,13,79)	RS1/16SS473J
R 1369	(B,15,76)	RS1/16SS473J
R 1377	(A,2,68)	RS1/16SS103J
R 1378	(A,1,68)	RS1/16SS103J
R 1379	(A,1,44)	RS1/16SS0R0J
R 1380	(A,31,65)	RS1/16SS681J
R 1381	(A,31,63)	RS1/16SS105J
R 1383	(B,24,52)	RS1/16SS0R0J
R 1384	(A,3,68)	RS1/16SS103J
R 1385	(A,-2,63)	RS1/16SS103J
R 1386	(A,-1,63)	RS1/16SS103J

CAPACITORS

C 401	(A,20,39)	CKSRYB474K10
C 402	(B,6,39)	CKSSYB104K10
C 403	(B,6,41)	CKSSYB103K16
C 404	(A,4,32)	CKSRYB105K10
C 405	(A,11,17)	CKSRYB474K10
C 406	(A,19,19)	CKSRYB474K10
C 407	(A,16,14)	CKSSYB103K16
C 408	(A,19,16)	CKSRYB474K10
C 410	(B,6,37)	CKSSYB103K16
C 411	(B,6,35)	CKSSYB104K10
C 601	(B,8,27) 10µF/10V	CCH1349
C 602	(B,12,27) 10µF/10V	CCH1349
C 603	(B,14,27)	CKSSYB102K50
C 604	(B,6,27)	CKSRYB474K10
C 605	(B,11,63)	CSZSR470M6R3
C 606	(B,7,65)	CKSSYB102K50
C 607	(B,5,78)	CKSRYB474K10
C 611	(A,15,13)	CCSSCH181J25
C 1101	(B,14,101)	CSZSC470M16
C 1102	(A,25,100)	CSZSR470M6R3
C 1103	(B,30,105)	CKSSYB104K10
C 1104	(B,33,102)	CKSSYB103K16

Circuit Symbol and No.		Part No.
C 1105	(A,22,100)	CSZSR101M6R3
C 1106	(B,32,100)	CKSSYB104K10
C 1107	(B,31,95)	CKSSYB103K16
C 1108	(B,23,105)	CKSSYB104K10
C 1109	(A,21,105)	CKSRYB473K25
C 1110	(A,30,106)	CKSRYB473K25
C 1111	(A,32,103)	CKSSYB103K16
C 1112	(A,22,94)	CKSRYB105K10
C 1113	(A,24,94)	CKSRYB105K10
C 1114	(A,31,102)	CKSSYB103K16
C 1121	(A,6,83)	CKSSYB221K50
C 1122	(A,2,79)	CKSRYB393K16
C 1124	(A,13,74)	CKSSYB221K50
C 1125	(B,16,76)	CKSSYB104K10
C 1126	(A,15,75)	CKSSYB104K10
C 1127	(B,17,76)	CKSSYB104K10
C 1128	(B,15,80)	CKSRYB472K50
C 1129	(A,22,79)	CKSSYB104K10
C 1132	(A,25,83)	CKSRYB561K50
C 1133	(A,24,86)	CKSRYB561K50
C 1134	(A,23,86)	CKSRYB273K16
C 1135	(B,20,81)	CKSSYB473K10
C 1136	(A,22,90)	CKSSYB104K10
C 1137	(A,22,89)	CKSSYB104K10
C 1138	(A,14,89)	CKSSYB104K10
C 1139	(A,16,90)	CKSSYB104K10
C 1201	(A,39,47)	CKSSYB104K10
C 1204	(B,1,72)	CEVW101M16
C 1205	(A,39,36)	CKSRYB104K16
C 1206	(B,45,35)	CKSRYB103K50
C 1207	(B,45,34)	CKSRYB103K50
C 1208	(B,51,42)	CCSSCH5R0C50
C 1209	(B,51,45)	CCSSCH470J50
C 1210	(A,51,52)	CKSSYB104K10
C 1301	(A,6,42)	CKSSYB104K10
C 1302	(A,13,41)	CKSSYB104K10
C 1303	(A,15,41)	CKSRYB224K10
C 1304	(A,20,42)	CKSSYB104K10
C 1305	(A,23,41)	CKSRYB224K10
C 1306	(A,32,45)	CKSSYB471K50
C 1307	(A,33,52)	CKSSYB104K10
C 1308	(A,31,52)	CKSRYB224K10
C 1309	(A,35,54)	CKSSYB104K10
C 1310	(A,35,55)	CKSSYB104K10
C 1311	(A,35,57)	CKSSYB103K16
C 1312	(A,37,58)	CKSSYB103K16
C 1313	(A,30,61)	CKSSYB104K10
C 1314	(A,34,61)	CKSRYB224K10
C 1315	(B,27,65)	CKSRYB102K50
C 1316	(B,24,65)	CKSRYB393K16
C 1317	(A,30,68)	CKSSYB104K10
C 1318	(A,30,71)	CKSSYB103K16
C 1319	(A,27,77)	CKSSYB104K10
C 1320	(A,24,78)	CKSSYB103K16
C 1329	(A,22,72)	CKSSYB104K10
C 1330	(B,24,67)	CKSRYB183K50
C 1331	(B,21,66)	CCSSCH470J50
C 1332	(A,20,72)	CKSRYB224K10
C 1333	(A,19,72)	CKSRYB105K10
C 1334	(B,15,67)	CKSRYB102K50

Circuit Symbol and No.		Part No.
C 1335	(B,18,63)	CKSSYB562K25
C 1336	(A,18,72)	CKSSYB104K10
C 1337	(A,16,72)	CKSRYB102K50
C 1338	(B,16,69)	CKSRYB102K50
C 1339	(A,15,72)	CKSRYB102K50
C 1340	(A,13,71)	CKSSYB104K10
C 1341	(B,16,66)	CCSSCH101J50
C 1342	(B,16,65)	CKSRYB391K50
C 1343	(B,16,63)	CKSRYB471K50
C 1344	(B,16,62)	CKSRYB331K50
C 1346	(A,8,71)	CKSRYB224K10
C 1347	(A,1,61)	CKSSYB104K10
C 1348	(A,1,57)	CKSSYB104K10
C 1349	(A,2,56)	CKSSYB104K10
C 1350	(A,2,52)	CKSSYB104K10
C 1351	(A,1,48)	CKSSYB104K10
C 1352	(A,1,46)	CKSSYB104K10
C 1355	(B,2,59)	CSZS100M6R3

D

Unit Number:CWX3154
Unit Name:Compound Unit(A)

Q 1299	Photo-taransistor	CPT231SCTD
S 1201	Spring Switch(12cm)	CSN1069
S 1202	Spring Switch(8cm)	CSN1069
S 1203	Spring Switch(DISC SENS)	CSN1069
S 1204	Spring Switch(DISC SENS)	CSN1070
S 1205	Spring Switch(8cm)	CSN1070
R 1298		RS1/16S0R0J
R 1299		RS1/16S0R0J

E

Unit Number:CWX3156
Unit Name:Compound Unit(B)

S 1206	Switch(CLAMP)	CSN1051

F

Unit Number:CWX3096
Unit Name:CD Core Unit(S10.1)

MISCELLANEOUS

IC 201	(A,39,24)	IC	UPD63763GJ
IC 203	(B,45,78)	IC	NJM2885DL1-33
IC 301	(A,49,88)	IC	BA5835FP
IC 701	(A,48,51)	IC	PE5454B
IC 703	(A,30,44)	IC	S-812C33AUA-C2N
Q 101	(A,20,22)	Transistor	2SA1577
Q 701	(B,62,59)	Transistor	UN2111
L 203	(A,53,32)	Inductor	CTF1389
L 207	(A,53,31)	Inductor	CTF1389
L 209	(A,26,20)	Inductor	CTF1389
L 703	(A,64,49)	Inductor	CTF1389
X 201	(A,51,35)	Ceramic Resonator 16.934MHz	CSS1603
X 701	(A,59,53)	Ceramic Resonator 4.00MHz	CSS1652
S 901	(A,15,43)	Switch(HOME)	CSN1067
S 903	(B,53,100)	Switch(DSCSNS)	CSN1068

Circuit Symbol and No.		Part No.
S 904	(B,35,108) Switch(12EJ)	CSN1067
S 905	(B,48,109) Switch(8EJ)	CSN1067

RESISTORS

R 101	(A,22,24)	RS1/10SR2R4J
R 102	(A,22,26)	RS1/10SR2R4J
R 103	(A,25,25)	RS1/10SR2R7J
R 201	(A,53,16)	RS1/16SS102J
R 202	(A,55,21)	RS1/16SS333J
R 221	(B,31,18)	RS1/16SS103J
R 222	(B,26,18)	RS1/16SS103J
R 225	(A,27,8)	RS1/16SS103J
R 226	(A,27,7)	RS1/16SS393J
R 227	(B,33,10)	RS1/16SS562J
R 228	(B,36,8)	RS1/16SS122J
R 229	(B,34,8)	RS1/16SS472J
R 232	(B,35,10)	RS1/16SS122J
R 241	(B,42,28)	RS1/16SS333J
R 243	(B,44,28)	RS1/16SS333J
R 245	(A,39,38)	RS1/16SS333J
R 301	(A,48,78)	RS1/16SS183J
R 302	(A,42,78)	RS1/16SS822J
R 304	(A,50,78)	RS1/16SS183J
R 305	(A,42,77)	RS1/16SS822J
R 307	(A,36,85)	RS1/16SS183J
R 308	(A,32,83)	RS1/16SS183J
R 309	(A,38,89)	RS1/16SS183J
R 310	(A,35,88)	RS1/16SS183J
R 601	(B,43,59)	RS1/16S101J
R 602	(B,41,62)	RS1/16S101J
R 606	(B,44,67)	RS1/16S0R0J
R 607	(B,43,56)	RS1/16SS0R0J
R 608	(B,36,67)	RS1/16SS0R0J
R 705	(B,50,59)	RS1/16SS221J
R 706	(B,57,61)	RS1/16SS221J
R 707	(A,62,47)	RS1/16SS473J
R 708	(B,50,57)	RS1/16SS221J
R 710	(A,28,77)	RS1/16SS102J
R 711	(B,44,53)	RS1/16SS221J
R 714	(B,51,53)	RS1/16SS473J
R 716	(A,63,56)	RS1/16SS472J
R 719	(B,49,45)	RS1/16SS221J
R 720	(B,46,52)	RS1/16SS471J
R 724	(A,62,42)	RS1/16S473J
R 725	(B,57,43)	RS1/16SS222J
R 726	(A,52,41)	RS1/16SS103J
R 727	(B,50,54)	RS1/16SS473J
R 729	(A,57,40)	RS1/16SS223J
R 730	(A,65,41)	RS1/16SS473J
R 731	(A,53,41)	RS1/16SS104J
R 737	(A,41,42)	RS1/16SS104J
R 740	(A,35,46)	RS1/16SS473J
R 742	(A,50,41)	RS1/16SS104J
R 746	(B,60,56)	RS1/16SS104J
R 750	(A,39,59)	RS1/16SS473J
R 754	(B,48,60)	RS1/16SS102J
R 755	(A,43,61)	RS1/16SS102J
R 765	(B,51,40)	RAB4CQ221J
R 769	(B,48,40)	RAB4CQ221J

Circuit Symbol and No.		Part No.
R 773	(B,39,37)	RAB4CQ221J
R 777	(B,48,51)	RS1/16SS221J
R 778	(B,48,52)	RS1/16SS221J
R 779	(B,45,54)	RS1/16SS221J
R 901	(B,52,65)	RAB4CQ221J
R 905	(B,54,60)	RS1/16SS221J
R 906	(B,56,68)	RS1/16SS221J
R 908	(B,45,69)	RS1/16SS0R0J
R 910	(B,44,69)	RS1/16SS0R0J
R 911	(B,40,73)	RS1/16SS102J

CAPACITORS

C 103	(B,14,8) 100µF/16V	CCH1504
C 105	(A,19,15)	CKSSYB104K10
C 108	(B,39,16)	CKSSYB104K10
C 110	(A,18,6)	CKSSYB104K10
C 201	(A,51,14)	CKSSYB102K50
C 202	(B,50,17)	CKSSYB104K10
C 203	(A,55,23)	CKSSYB104K10
C 204	(B,28,22)	CEVW220M6R3
C 205	(A,53,25)	CKSSYB104K10
C 208	(B,44,25)	CKSSYB104K10
C 209	(A,54,29)	CKSSYB104K10
C 212	(A,45,37)	CKSRYB105K10
C 216	(A,25,8)	CKSSYB332K50
C 217	(A,28,12)	CKSSYB104K10
C 218	(A,25,7)	CKSSYB473K10
C 219	(A,34,7)	CKSSYB104K10
C 220	(A,33,11)	CKSSYB182K50
C 221	(B,35,6)	CKSSYB104K10
C 222	(B,35,8)	CCSSCH560J50
C 223	(B,33,8)	CCSSCH4R0C50
C 224	(B,40,16)	CKSSYB104K10
C 225	(B,45,14)	CKSSYB103K16
C 226	(B,43,12)	CCSSCH680J50
C 227	(A,45,10)	CCSSCH470J50
C 228	(A,49,9)	CKSSYB103K16
C 234	(B,36,81)	CEVW221M4
C 237	(B,38,29)	CKSSYB104K10
C 239	(B,34,10)	CCSSCH220J50
C 242	(B,58,32)	CKSSYB104K10
C 243	(B,39,76)	CKSSYB104K10
C 244	(B,49,70)	CKSSYB104K10
C 246	(A,23,19)	CKSSYB104K10
C 251	(B,28,31)	CKSRYB102K50
C 260	(A,54,25)	CKSSYB104K10
C 301	(A,43,78)	CKSSYB221K50
C 302	(A,50,79)	CKSSYB221K50
C 303	(A,37,85)	CKSSYB472K25
C 304	(A,39,89)	CKSSYB103K16
C 305	(B,34,92)	CEVW101M16
C 307	(B,56,90)	CKSSYB104K10
C 601	(B,46,60)	CCSRCH102J50
C 602	(B,41,65)	CCSRCH102J50
C 701	(A,64,46)	CKSSYB104K10
C 703	(B,50,61)	CKSSYB103K16
C 706	(B,50,62)	CKSSYB104K10
C 707	(A,36,45)	CKSSYB104K10
C 712	(A,22,42)	CKSRYB224K16
C 714	(B,60,45)	CKSSYB104K10

Circuit Symbol and No.		Part No.
C 716	(A,61,40)	CKSSYB103K16
C 722	(B,52,48)	CKSQYB475K6R3
C 723	(A,26,41)	CKSRYB105K10
C 903	(B,56,70)	CKSSYB471K50
C 906	(A,40,77)	CKSRYB224K16
C 907	(A,47,76)	CKSSYB103K16
C 910	(B,60,71)	CKSQYB225K10

Miscellaneous Parts List

	Pickup Unit(Service)	CXX1815
M 1	Motor Unit(LOADING)	CXC4659
M 2	Motor Unit(CARRIAGE)	CXC4314
M 3	Motor(SPINDLE)	CXM1308
	Pickup Unit(P10)(Service)	CXX1641
M 1	Motor Unit(SPINDLE)	CXC4440
M 2	Motor Unit(LOADING/CARRIAGE)	CXB8933
M 10	Motor Unit(FLAP)	CZX5102
	LCD Panel	CWX3229
	Fan Motor	CXM1320

6. ADJUSTMENT

6.1 JIG CONNECTION DIAGRAM

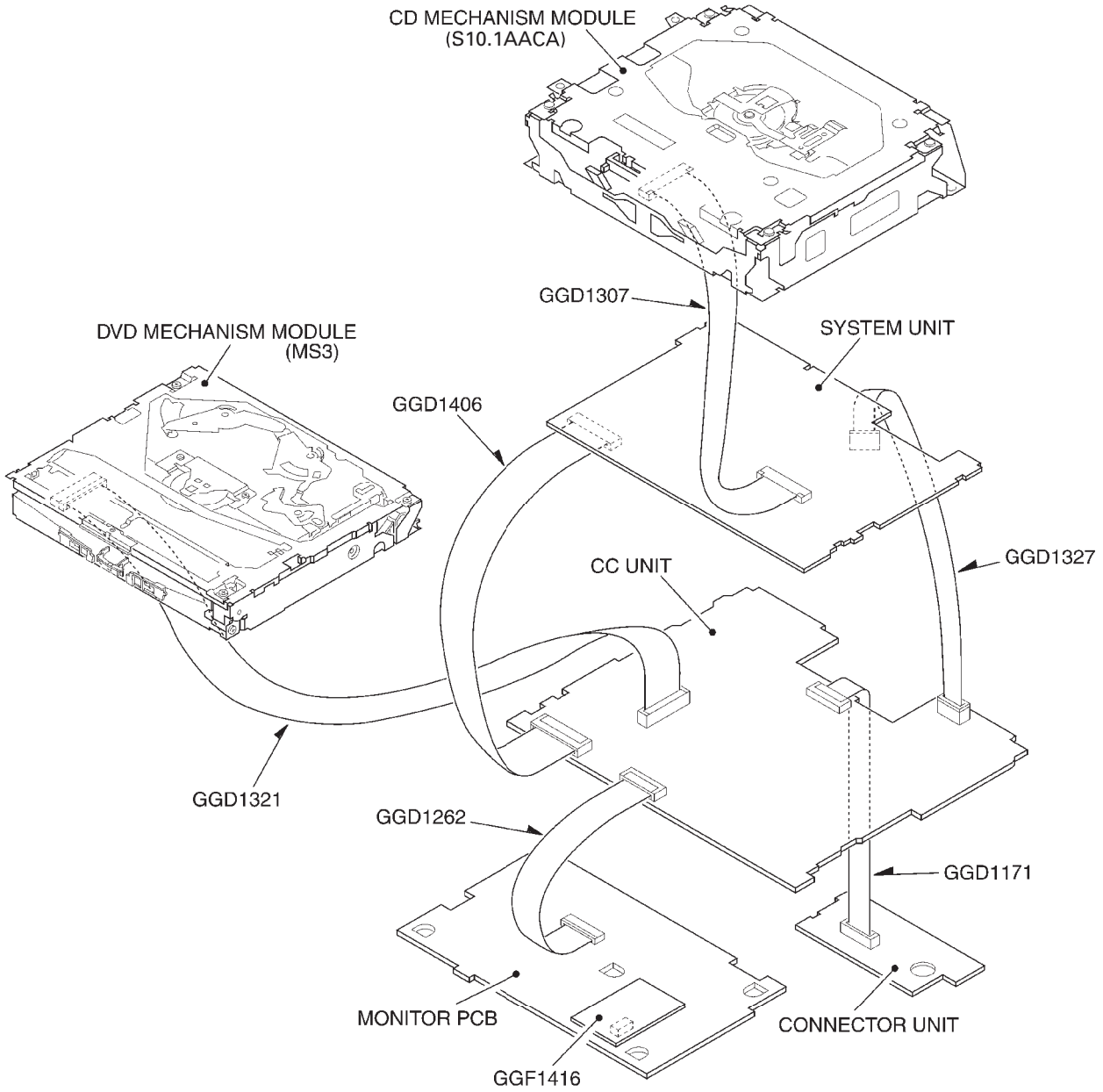

● Jigs List

Name	Jig No.	Remarks
45-Pin FFC	GGD1321	DVD Mechanism Module(MS3)(CN601) <--> CC Unit(CN2)
23-Pin BBR FFC	GGD1307	CD Mechanism Module(S10.1)(CN901) <--> System Unit(CN1301)
80-Pin FFC	GGD1406	System Unit(CN1701) <--> CC Unit(CN605)
20-Pin Extension Cord	GGD1327	System Unit(CN1802) <--> CC Unit(CN801)
30-Pin FFC	GGD1171	CC Unit(CN702) <--> Connector Unit(CN2804)
33-Pin FFC	GGD1262	CC Unit(CN701) <--> Monitor PCB(CN5002)
Monitor Adjustment PCB	GGF1416	For OSD display (*1)
Test Disc	GGV1237	Operation check
Test Disc	TCD-782	Checking the grating(CD)
L.P.F.		Checking the grating(Two pieces)
Test Disc	GGV1018	Checking the grating(DVD)

*1) Since this product does not have OSD IC, OSD for adjustment is displayed by using GGF1416 at the time of monitor adjustment.

6.2 DVD ADJUSTMENT

1) Precautions

This product uses 5V and 3.3V as standard voltages. The electrical potential that is the reference for signals, is not GND, but VREF (approximately 2.2V) and VHALF (approximately 1.65V).

During product adjustments, if the reference voltage is mistakenly taken as GND, and a grounding contact is made, not only would it be impossible to measure the accurate electrical potential, but also the servo motor would malfunction, resulting in the application of a strong impact on the pick up. The following precautionary measures should be strictly adhered to, in order to avoid such problems.

The reference voltage and GND should not be confused when using the minus probe of a measurement device. When an oscilloscope is being used special care should be taken to make sure that the reference voltage is not connected to the probe of ch1 (on the minus side), while the probe of ch2 (on the minus side), is connected to GND. Further, since the body frame of most measurement devices have the same electrical potential as the minus side of the probe, the body frame of the measurement device should be set to floating ground.

If the reference voltage is connected to GND by mistake, turn the regulator OFF immediately, or turn the power OFF.

- Remove the filters and wires used for measurements only after the regulator has been turned OFF.
- After the power supply is turned on, regulator ON the following adjustment and measurement are promptly done.
- Whenever the product is in the test mode, the software will not take any protective action. For this reason, special care should be taken to make sure that no mechanical or electrical shock could be applied to the product when taking measurements in the test mode.
- Whenever the EJECT key is pressed to eject the disk, no other keys, other than the EJECT key, should be pressed until the disk eject action has been completed.
- Press the EJECT key only after the disk has stopped completely.
- If the product hangs up turn the power OFF immediately.
- Laser didoes may be damaged, if the volume switch for the laser power adjustment of the pick up unit, is turned.

Attention)

- Test mode starting procedure
  Please select "MS3 check" to start test mode.
- Test mode stopping procedure
  ACC and Backup OFF.

● Front-End test mode flow chart

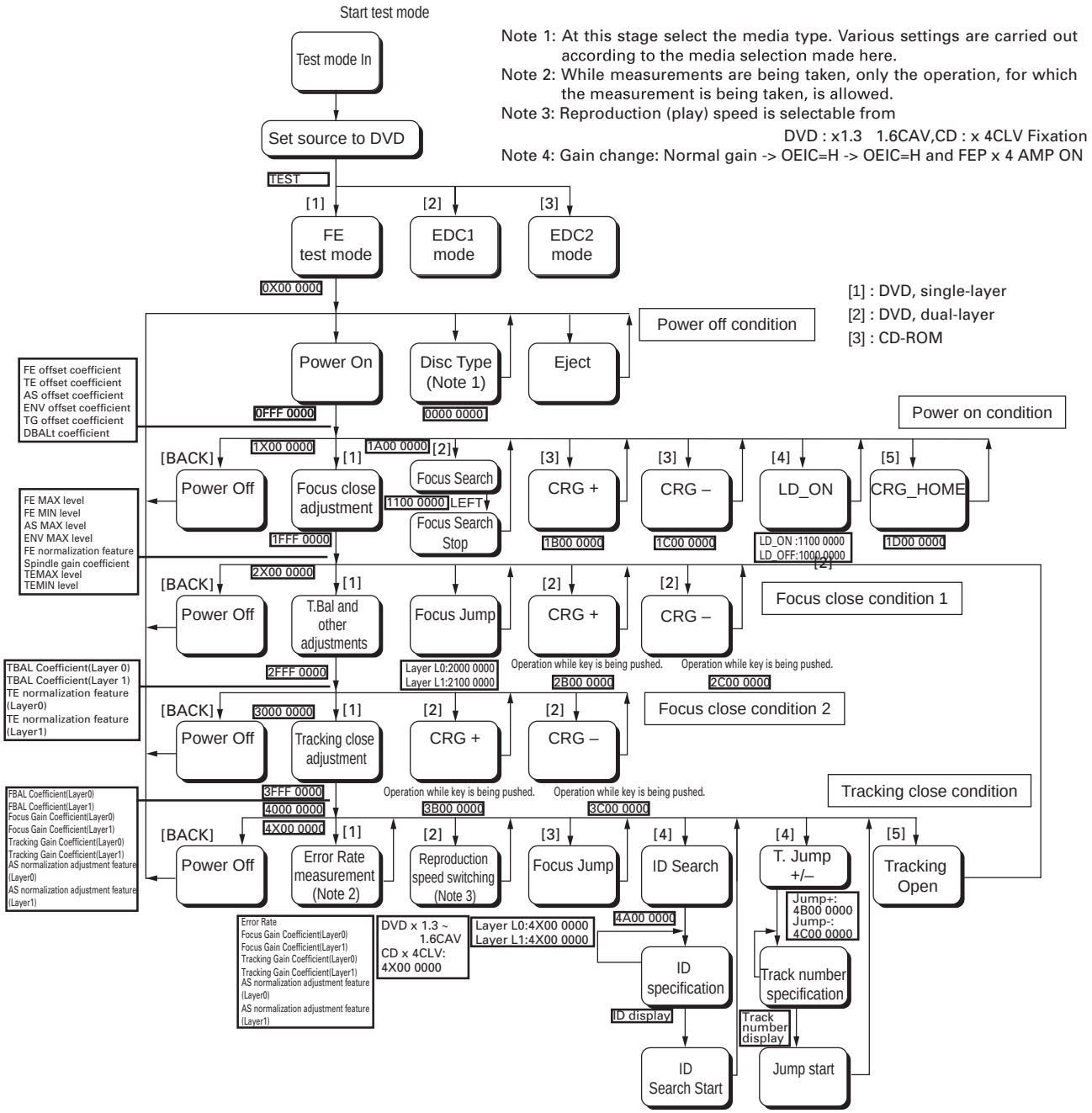

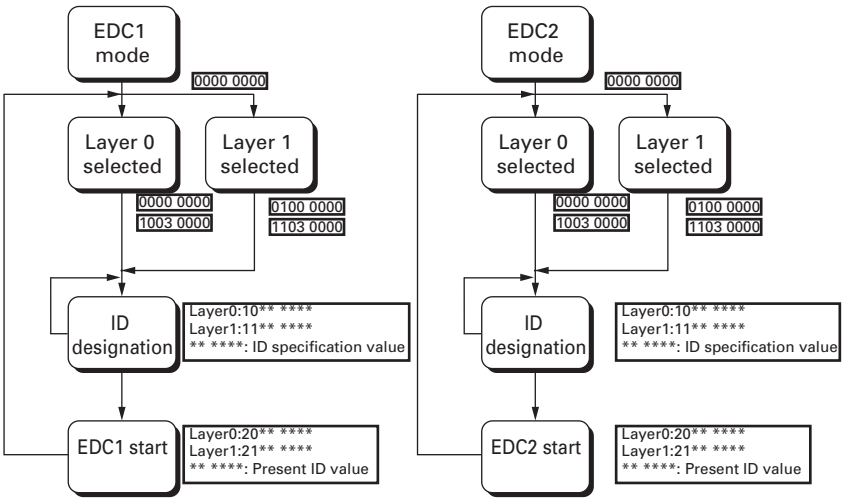

F-close and F-search cannot be executed, unless LD-ON is set.
[If F-close isn't executed within 9 seconds after LD-ON, it switches to LD-OFF automatically.
And even if F-search is executed within 9 seconds after LD-ON, it also switches to LD-OFF.]
Please carry out F-close after carrying out power-off at once and carrying out power-on again, when carrying out F-close after performing F-search.

The track number designation is selected from the track numbers already prepared for selection. Switching to cyclic operation is made at step ①, and the decision is finalized (entered) in step ③.

For CD: Tracks 1, 4, 10, 11 and 32.

For DVD: Tracks 1, 4, 10, 11, 32, 64 and 100.

Method for designating an ID address:

- A number of digits are determined through commands RIGHT and LEFT. Numerical UP/DOWN operations are performed through commands ① and ②. The decision is finalized (entered) with command ③.

Display

Error Code List

Error status from DVD microcomputer	Contents	Display
0X50	Mecha. error	No display
0X40	No disc	No display
0X30	The temperature is abnormal	Thermal Protection in Motion
0X20	Read error	Error-02-XX
0XE2	Non-playable disc	NON-PLAYABLE DISC
0X90	Different region disc	DIFFERENT REGION DISC
0XFF	Undefined error	Error-FF

Error code of read error(Part of XX)

Error Code	Contents	Display
0X99	Data cannot read	Please confirm the disc
0X80	The address cannot be found	Please confirm the disc
0X90	Focus error	Please confirm the disc
0X91	Spindle lock NG	DVD is stopping because mechanism detected abnormality
0X92	Carriage home NG	DVD is stopping because mechanism detected abnormality
0X93	FOK error	Please confirm the disc
0X94	ID/Subcode cannot be read	Please confirm the disc
0X95	High spindle rotation	DVD is stopping because mechanism detected abnormality
0X96	Row spindle rotation	DVD is stopping because mechanism detected abnormality
0X98	TOC cannot be found	Please confirm the disc
0X9A	AV chip error	DVD is stopping because mechanism detected abnormality
0X9B	RecaveryNG(BE)	DVD is stopping because mechanism detected abnormality
0X9C	Play state error	
0X9D	Disc data error	
0X9E	Serface error (Disc distinction is improper)	

● Skew adjustment

The skew adjustment is to adjust the pickup and the flatness of the disc so that the beam from the pickup continues to go to the disc vertically. In MS3 mecha, the pickup shaft on the inner track near the carriage motor is fixed, so the fixed position is regarded as the standard and the flatness is adjusted. Observing the RF waveform on the oscilloscope, repeat the adjustment on the inner track position and the outer track position, and narrow the adjusted value.

If any of the following replacements have been performed on the system, adjustments for pick up, must be conducted:

1. Pick up unit replacement
2. Spindle motor replacement
3. Carriage chassis replacement
4. Pick up unit main shaft replacement
5. Pick up unit sub-shaft replacement

Measurement device and tools : Oscilloscope
Allen key wrench
Screw lock (GYL1001)
Disk used : GGV1018
Measurement reference : GND1
Measurement point : RFOUT
Connection diagram
DVD core unit

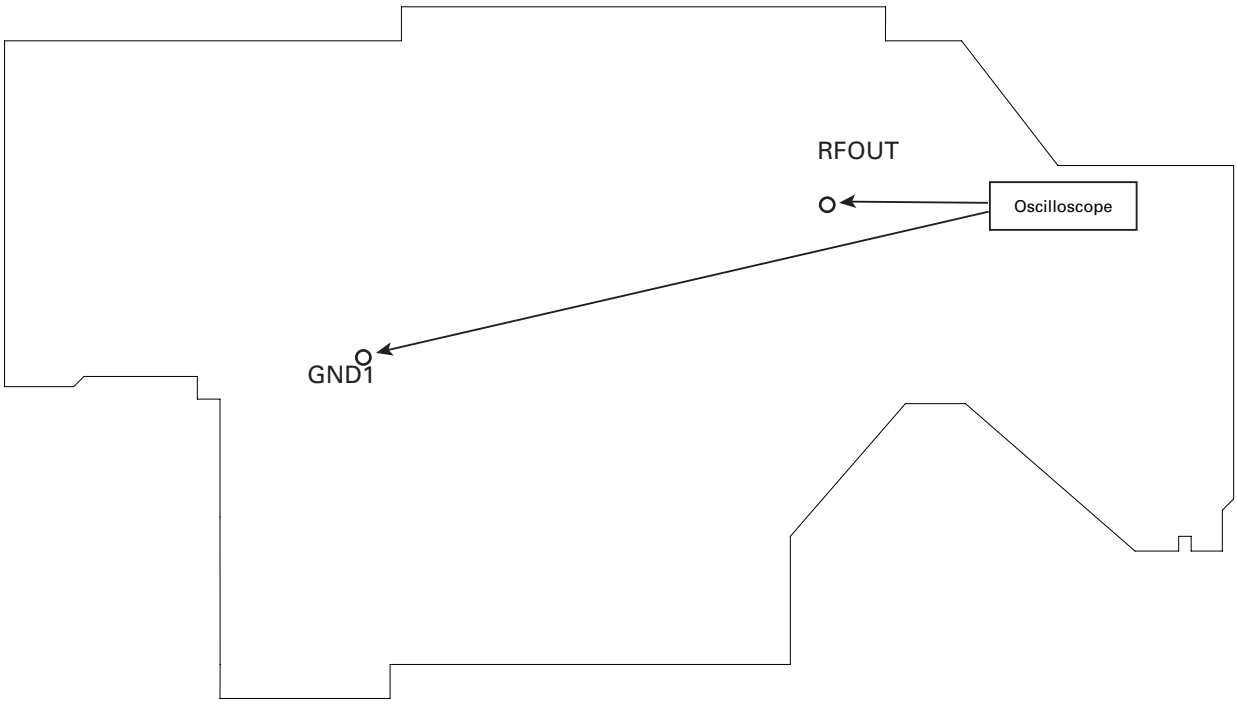

Symptoms in case of poor adjustment: Error efficiency deteriorated: 10^{-3} (Optimum value: 10^{-4} or lower)
High jitter of the RF signal RF waveform deformed
Unstable operation in tracking closing and servo control

Caution: Avoid exposing your eyes to laser beams for a long time.

Preparation for adjustment: Clean both ends of the shafts.
Use brand new skew screws supplied with the service kit GXX1234.

Procedures:

1. Place the DVD mechanism module upside down.
   To avoid the disc from being robbed when it is turned upside down, first put a coin of about 1.5 mm on the table, then turn the disc upside down and set it so that the ① in the figure comes to the point immediately above the coin.
2. After replacing the pickup (by referring to the procedures of "Removing the Pickup."), roughly adjust the three skew screws through visual check so that the pickup is mounted in parallel to the CRG chassis around the inner and outer tacks.
3. Connect an oscilloscope as shown in the connecting diagram.
4. Turn on the power of the product. Load the test disc (GGV1018).
5. In the front-end test mode, set the disc type to DVD layer 1. Then, turn on the power. Move the pickup toward the inner tracks.
6. Turn on the laser diodes.
7. With the focus servo closed, complete all automatic adjustments. Close the tracking servo, and then complete all automatic adjustments.

8 Follow the next procedures, from 8-1 to 8-5, and adjust the (three) skew screws.

8-1 Move the pickup toward the inner track and turn the skew adjustment screw C so that the RF level of oscilloscope becomes the maximum.
(Tangential adjustment at the inner track position: Adjust the flatness of the disc at the inner track position with the adjustment screw C)

8-2 Move the pickup toward the outer track and turn the skew adjustment screw B so that the RF level becomes the maximum.
(Tangential adjustment at the outer track position: Adjust the flatness of the disc at the outer track position with the adjustment screw B)

8-3 Leave the pickup at the outer track position and turn the skew adjustment screws A and B in the same direction alternately one quarter at a time (A•B•A•B •••) so that the RF level becomes the maximum.
(Radial adjustment at the outer track position: Keeping the flatness at the outer track position, adjust the flatness of the whole disk with the adjustment screws A and B)

8-4 Move the pickup toward the inner track and turn the skew adjustment screw C so that the RF level becomes the maximum.
(Tangential adjustment at the inner track position: Adjust the flatness of the disc at the inner track position with the djustment screw C)

8-5 Repeat the steps from 8-2 to 8-4 three times, and adjust at the position where the RF level becomes the maximum.

9. Turn off the power in the test mode. After confirming that the disc has stopped, eject the disc.
10. Adjust with a screw rock the shaft and skew adjustment screw to the same state as initial one.

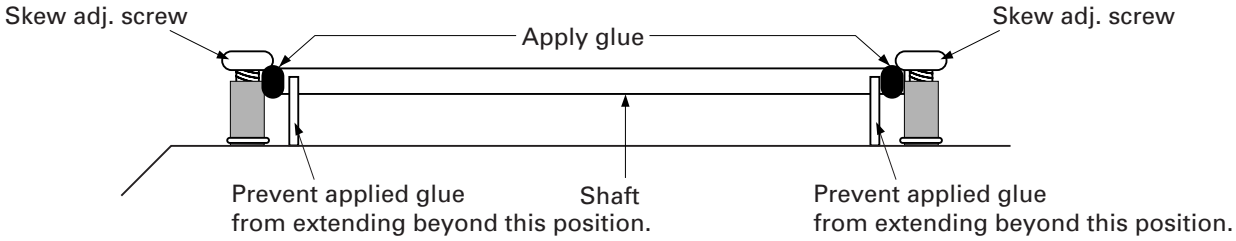

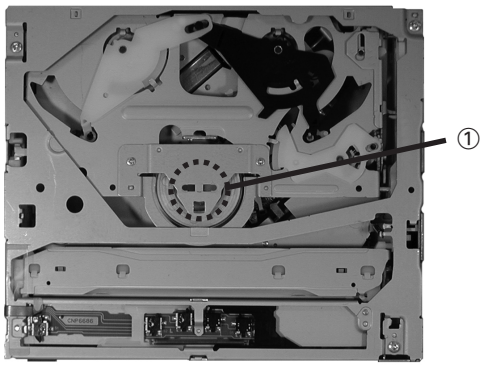

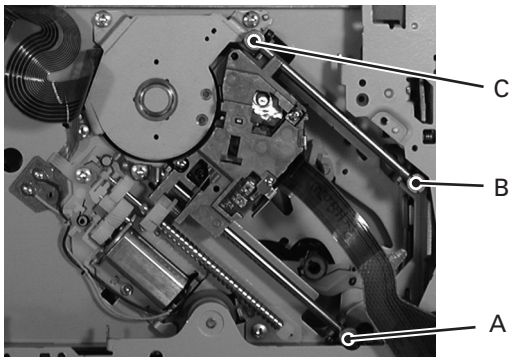

6.3 CD ADJUSTMENT

1) Cautions on adjustments

• In this product the single voltage (3.3V) is used for the regulator. The reference voltage is the REFO1 (1.65V) instead of the GND.
If you should mistakenly short the REFO1 with the GND during adjustment, accurate voltage will not be obtained, and the servo's misoperation will apply excessive shock to the pickup. To avoid such problems:
a. Do not mix up the REFO1 with the GND when connecting the (-) probe of measuring instruments. Especially on an oscilloscope, avoid connecting the (-) probe for CH1 to the GND.
b. In many cases, measuring instruments have the same potential as that for the (-) probe. Be sure to set the measuring instruments to the floating state.
c. If you have mistakenly connected the REFO1 to the GND, turn off the regulator or the power immediately.

• Before mounting and removing filters or leads for adjustment, be sure to turn off the regulator.

• For stable circuit operation, keep the mechanism operating for about one minute or more after the regulator is turned on.

• In the test mode, any software protections will not work. Avoid applying any mechanical or electrical shock to the mechanism during adjustment.

• The RFI and RFO signals with a wide frequency range are easy to oscillate. When observing the signals, insert a resistor of 1k ohms in series.

• The load and eject operation is not guarantied with the mechanism upside down. If the mechanism is blocked due to mistaken eject operation, reset the product or turn off and on the ACC to restore it.

2) Test mode

This mode is used to adjust the CD mechanism module.
• To enter the test mode.
While pressing the ANGLE and SOURCE keys at the same time, reset.
• To exit from the test mode.
Turn off the ACC and back up.

Notes:
a. During ejection, do not press any other keys than the EJECT key until the loaded disc is ejected.
b. If you have pressed the (→) key or (←) key during focus search, turn off the power immediately to protect the actuator from damage caused by the lens stuck.
c. For the TR jump modes except 100TR, the track jump operation will continue even if the key is released.
d. For the CRG move and 100TR jump modes, the tracking loop will be closed at the same time when the key is released.
e. When the power is turned off and on, the jump mode is reset to the single TR (91), the RF amp gain is set to 0dB, and the auto-adjustment values are reset to the default settings.

● Flow Chart

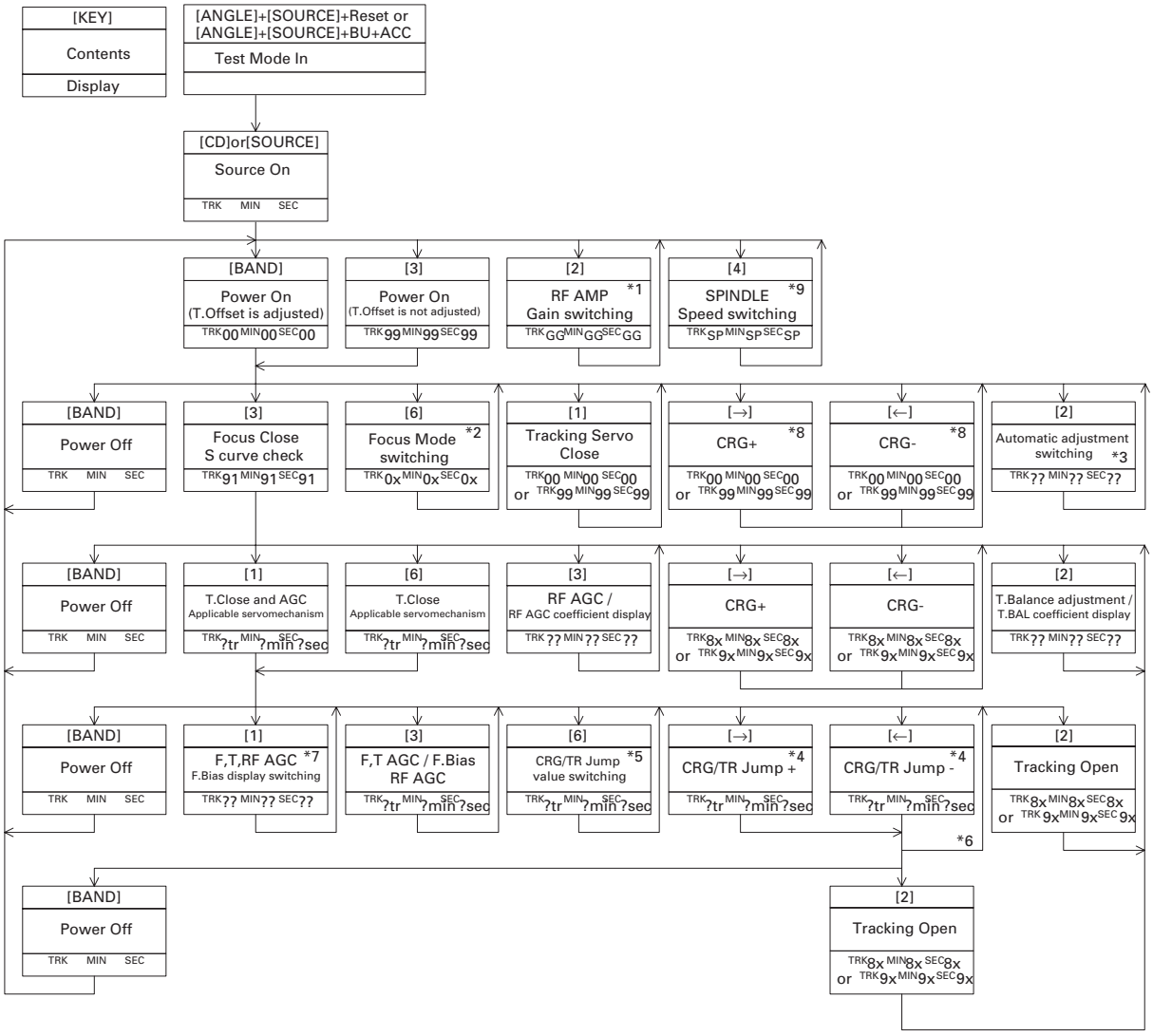

*1) TYP (TRK MIN SEC) → -6dB (TRK 06 MIN 06 SEC 06) → -12dB (TRK 12 MIN 12 SEC 12)

*2) Focus Close (TRK 00 MIN 00 SEC 00 (TRK 99 MIN 99 SEC 99)) → S.Curve check setting (TRK 01 MIN 01 SEC 01) → F EQ measurement setting (TRK 02 MIN 02 SEC 02)

*3) F.Offset Display → T.Offset Display → Switch to the order of the original display

*4) 1TR / 32TR / 100TR

*5) Single TR → 32TR → 100TR → CRG Move
9x(8x) : 91(81) 92(82) 93(83) 94(84)

*6) Only at the time of CRG move, 100TR jump

*7) TRK/MIN/SEC → F.AGC → T.AGC → F Bias → RF AGC

*8) CRG motor voltage = 2[V]

*9) Applicability : A, B, C, D, E, F
TYP(1X) (TRK MIN SEC) → 2X (TRK 22 MIN 22 SEC 22) → 1X (TRK 11 MIN 11 SEC 11)
As for the double speed (2x), audio output cannot be supported

Applicability : G
TYP(2X) (TRK MIN SEC) → 1X (TRK 11 MIN 11 SEC 11) → 2X (TRK 22 MIN 22 SEC 22)

[Key]	Operation Test Mode
[BAND]	Power On / Off
[→]	CRG + / TR Jump + (Direction of the external surface)
[←]	CRG - / TR Jump - (Direction of the internal surface)
[1]	U.CLS and AGC and Applicable servomechanism / AGC, AGC display setting
[2]	RF Gain switching / Offset adjustment display / T.Balance adjustment / T.Open
[3]	Close, S.Curve / Rough Servo and RF AGC / F, T, RF AGC
[4]	SPDL 1X / 2X switching As for the double speed (2x), audio output cannot be supported.
[5]	Error Rate measurement 1st - ON : ERR count Beginning (30Sec) 2nd - ON : BER display data [%]
[6]	F.Mode switching / Tracking Close / CRG • TR Jump switching

6.4 CHECKING THE GRATING AFTER CHANGING THE PICKUP UNIT

• **Note :**
The grating angle of the PU unit cannot be adjusted after the PU unit is changed. The PU unit in the CD mechanism module is adjusted on the production line to match the CD mechanism module and is thus the best adjusted PU unit for the CD mechanism module. Changing the PU unit is thus best considered as a last resort. However, if the PU unit must be changed, the grating should be checked using the procedure below.

• **Purpose :**
To check that the grating is within an acceptable range when the PU unit is changed.

• **Symptoms of Mal-adjustment :**
If the grating is off by a large amount symptoms such as being unable to close tracking, being unable to perform track search operations, or taking a long time for track searching.

• **Method :**

• Measuring Equipment	• Oscilloscope, Two L.P.F.
• Measuring Points	• E, F, REFO1
• Disc	• TCD-782
• Mode	• TEST MODE

CD CORE UNIT(S10.1)

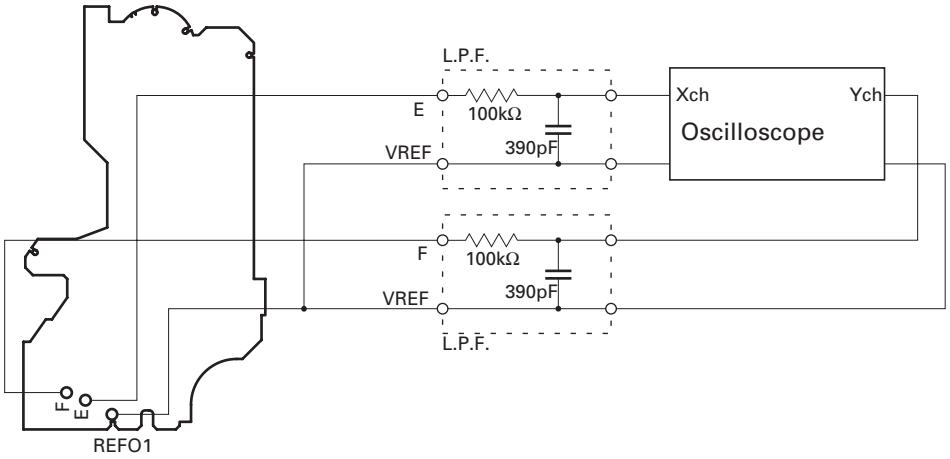

• **Checking Procedure**
1. In test mode, load the disc and switch the 3V regulator on.
2. Using the → and ← buttons, move the PU unit to the innermost track.
3. Press key 3 to close focus, the display should read "91". Press key 2 to implement the tracking balance adjustment the display should now read "81". Press key 3. The display will change, returning to "81" on the fourth press.
4. As shown in the diagram above, monitor the LPF outputs using the oscilloscope and check that the phase difference is within 75° . Refer to the photographs supplied to determine the phase angle.
5. If the phase difference is determined to be greater than 75° try changing the PU unit to see if there is any improvement. If, after trying this a number of times, the grating angle does not become less than 75° then the mechanism should be judged to be at fault.

• **Note**
Because of eccentricity in the disc and a slight misalignment of the clamping center the grating waveform may be seen to "wobble" (the phase difference changes as the disc rotates). The angle specified above indicates the average angle.

• **Hint**
Reloading the disc changes the clamp position and may decrease the "wobble".

Grating waveform

Ech → Xch 20mV/div, AC
Fch → Ych 20mV/div, AC

0°

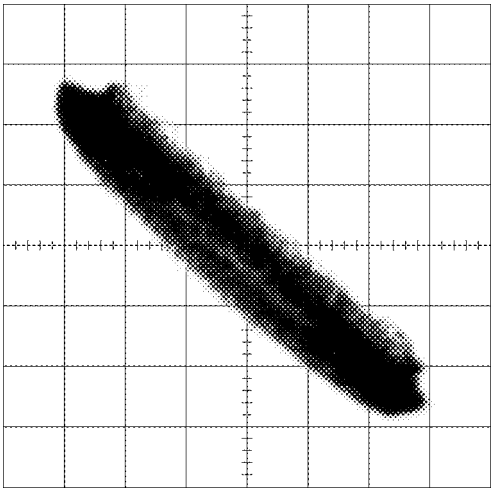

30°

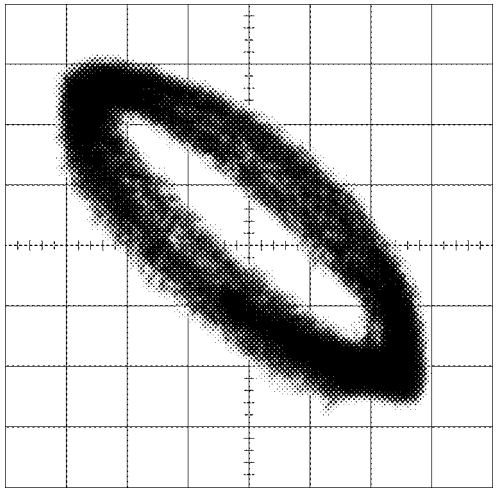

45°

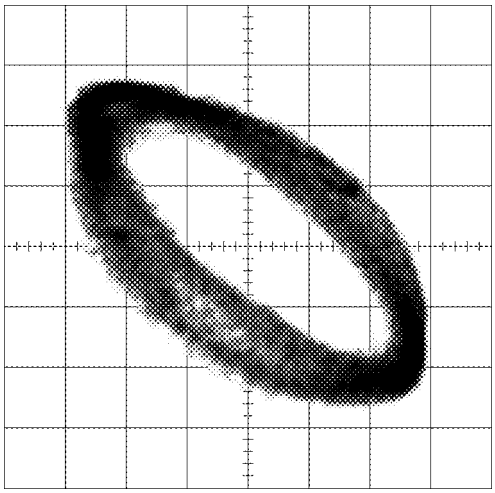

60°

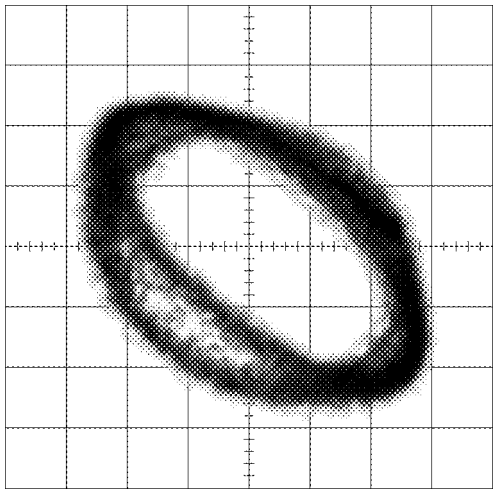

75°

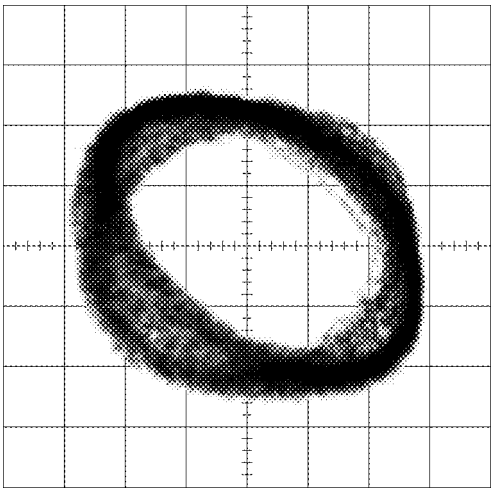

90°

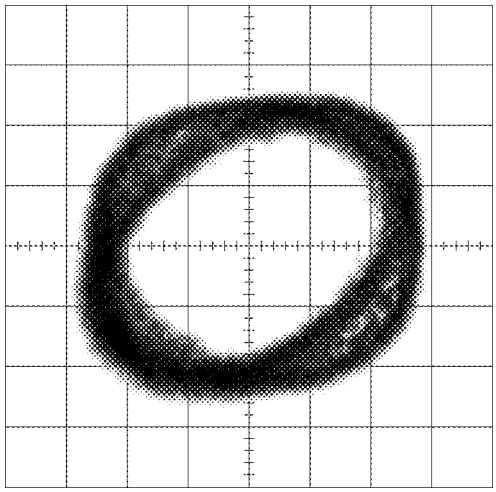

6.5 ERROR MODE

● Error Messages

Error is displayed with number for Error cause when CD is inoperative or stops with Error during operation. The purpose is to reduce nonsense calls from users as well as to assist all related analysis and repair for defects at service station.

(1) Basic Display Method

1) When CSMOD (CD mode area for system) is SERRORM, Error code will be written in DMIN (minutes area for display), DSEC (seconds area for display). The same data shall be written in DMIN and DSEC. DTNO is blank as usual.

2) Display Example of Head Unit

The following is about LCD display ability. xx is Error number.

8 digits	6 digits	4 digits
ERROR–xx	ERR–xx OR Err–xx	E–xx

(2) Error Code List

No.	Classification	Contents	Details • Cause
10	Electricity	Carriage Home NG	CRG can't move to the inner. CRG can't move from the inner. → HOME SW failure, CRG movement failure.
11	Electricity	Focus Search NG	Focus can't be caught. → Back of Disc / Severe dirt and vibration.
12	Electricity	Spindle Lock NG Subcode NG RF-amp NG	Not spindle, lock. Wrong subcode (can't read). → Defective Spindle. Scratch and dirt on Disc. Intense vibration. The appropriate gain of the RF amp cannot be obtained. → Defective spindle. → Scratched or dirty disc. Severe vibration. Abnormal CD signals. → Blanc CD-R disc. Disc inserted upside down.
17	Electricity	Setup NG	AGC protection doesn't work, out of Focus soon. → Scratch on Disc/Severe dirt and vibration.
22	Disc	Impossible to play	There is no playable MP3 or WMA file present in a disc. → No MP3 or WMA file exists in a CD-ROM disc inserted.
23	Disc	File Format NG	Contents are stored in an incompatible file format. → The contents in a CD-ROM disc inserted are recorded in a file format other than ISO9660 Level-1 and 2.
30	Electricity	Search Time Out	Can't reach the target address. → Defective CRG/tracking, or scratch on Disc.
44	Disc	Impossible to play	There is no playable TRK No. present in a disc. → All TRK Nos. In a disc inserted are specified as a track which should be skipped, in the track skip information.
50	Mecha	Disc Load / Eject NG	Disc loading/ejection cannot be complete. → Foreign objects entered into the mechanism. Disc caught in between during loading/ejection.
A0	System	Power NG	Power supply (VD) isn't connected to the ground. → Defective SW transistor. Abnormal power (failed connector)

Note : Error doesn't display in mechanism only. (CD off causes mechanism off)
If TOC can't be read, error wouldn't occur, but mechanism still continues its operation.
The upper digits of error code is mainly classified by 3 kinds as follows:
1x: Setup related error, 3x: Search related error, Ax: Other errors.

6.6 MONITOR PCB ADJUSTMENT

● **Adjustment point**

MONITOR PCB(SIDE A)

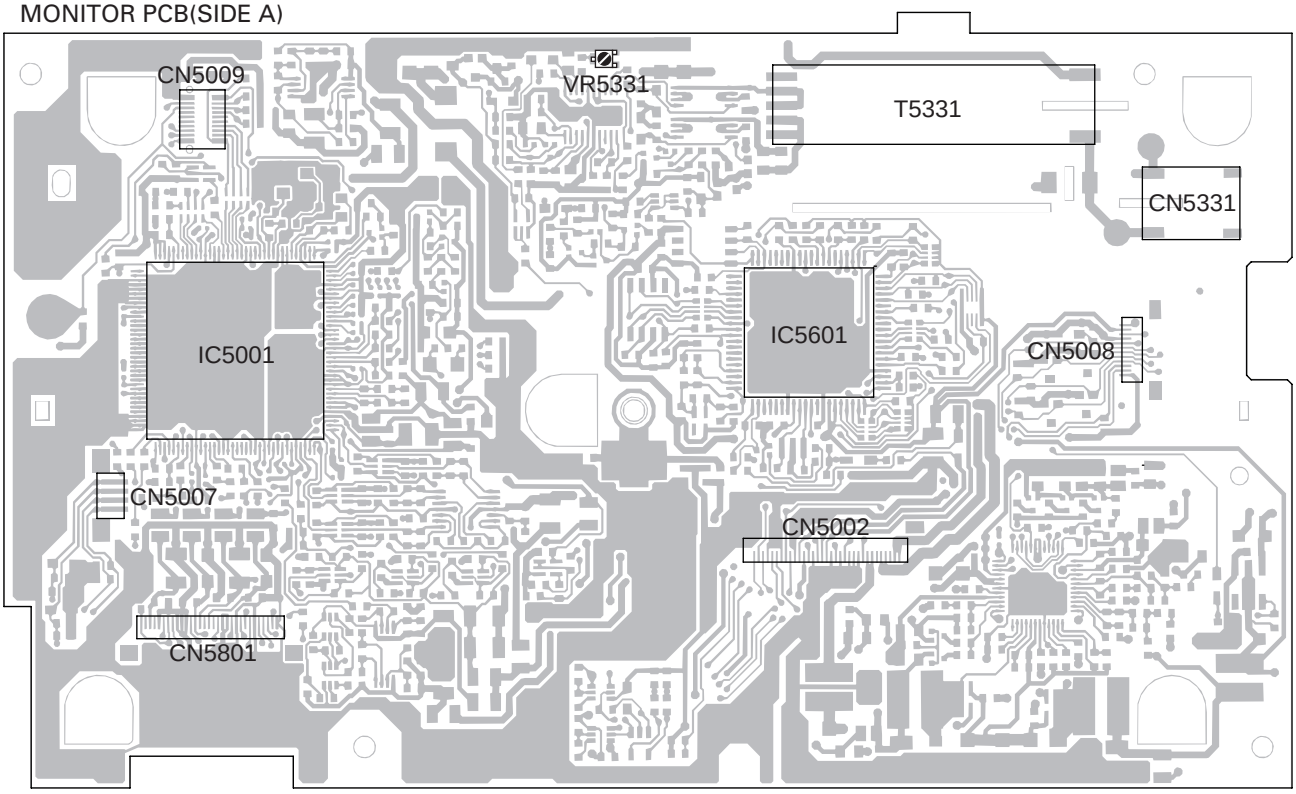

MONITOR PCB(SIDE B)

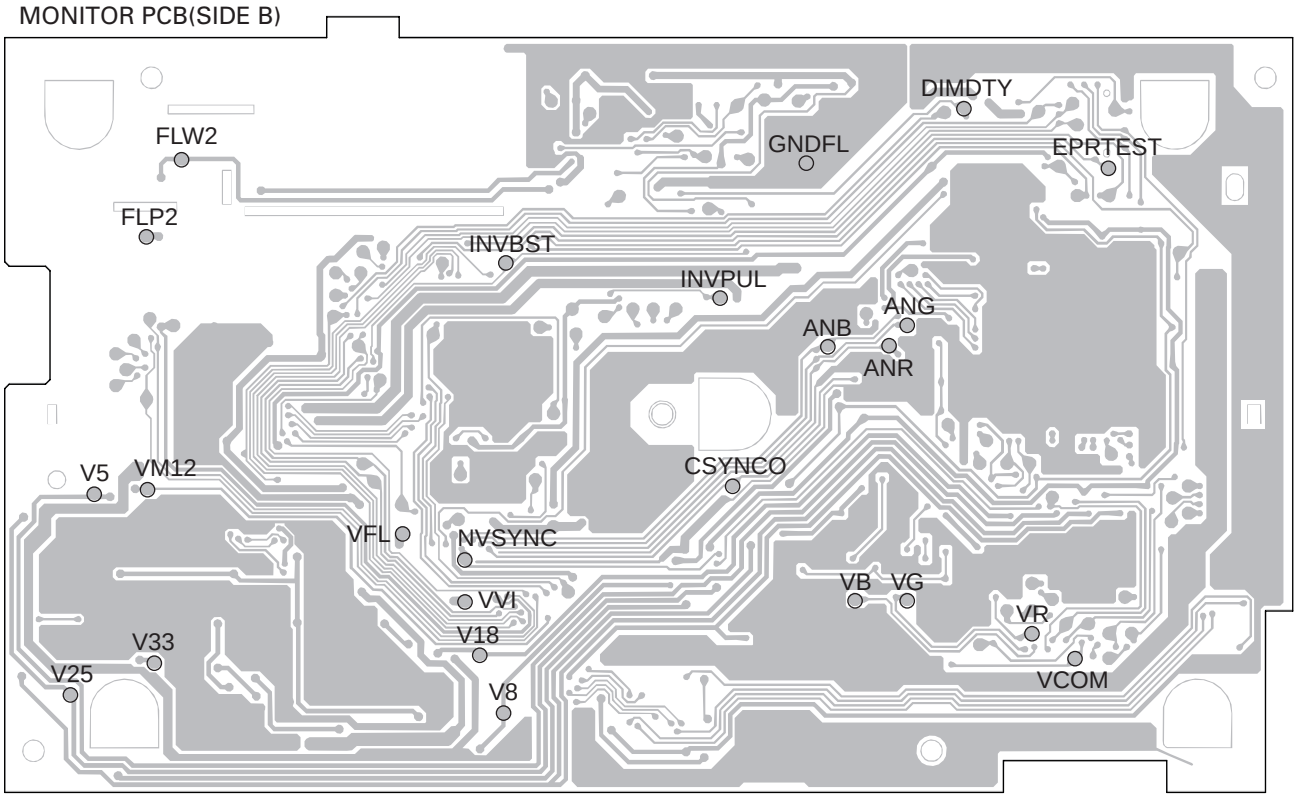

Notes:
When the power supply for TC90A64AF-P (IC4001) is OFF, be careful not to apply any voltage to its terminals except for IIC lines(SDA and SCL). The IIC lines can accept a maximum of 5V.

No	Adjustment item	Input	Measuring point	Adjusting point	Measuring method and specs.	Remarks
1	3.3V power supply verification	Apply 14.4V to TP VVI.	(TP V33)	—	V33 = 3.3V ± 0.3V	
2	2.5V power supply verification	Apply 14.4V to TP VVI.	(TP V25)	—	V25 = 2.5V ± 0.2V	
3	5V power supply verification	Apply 14.4V to TP VVI.	(TP V5)	—	V5 = 5.0V ± 0.3V	
4	8V power supply verification	Apply 14.4V to TP VVI.	(TP V8)	—	V8 = 8.0V ± 0.6V	
5	18.5V power supply verification	Apply 14.4V to TP VVI.	(TP V18)	—	V18 = 18.5V ± 0.8V	
6	-12V power supply verification	Apply 14.4V to TP VVI.	(TP VM12)	—	VM12 = -12.0V ± 0.6V	

No	Adjustment item	Input	Measuring point	Adjusting point	Measuring method and specs.	Remarks
7	Vcom amp output Voltage waveform Verification	Any input signal	TP VCOM	–	4.50V ± 0.20V	
8	Input waveform verification (RGB)	Apply a white 100% signal to TP AVR,ANG, ANB.	TP ANR,ANG, ANB	–	0.65V ± 0.02V	The signal generator should be used via 75 ohms. (specs in desinging : 75.0 ± 0.2ohms)
9	Input waveform verification (SYNC)	Apply a sync-hronizing signal to TP NVSYNC.	TP NVSYNC	–	3.3V ± 0.1V	
10	Input waveform verification (composite)	Apply a white 100% signal toTP CSYNCO.	TP CSYNCO	–	1.0V ± 0.02V	The signal generator should be used via 75 ohms.
11	RGB amp output voltage waveform verification	Apply a black signal to TP ANR,ANG,ANB. (Video level:0%)	TP VG	–	3.9V ± 0.2V	The input signal has no setup. (Apply a black signal to TP CSYNCO)
12	Gamma 0 Verification	Apply a 10-step signal to TP ANR,ANG,ANB.	TP VG	–	The first-step A = 0.50V ± 0.1V A= (A1+A2)/2 A1 A2	The input 10-step signal has no setup.
13	Gamma 2 verification	Apply a 10-step signal to TP ANR,ANG,ANB.	TP VG	–	The 10-step A = 3.00V ± 0.15V A= (A1+A2)/2 A1 A2	The input 10-step signal has no setup. If the measured value is out of specs, change the setting of SA24h D11 - 8 (γ2 inflection point: GAMMA2 in the line adjustment 1 mode) (Register setting specs: 6 ± 1)

No	Adjustment item	Input	Measuring point	Adjusting point	Measuring method and specs.	Remarks
14	B SUB BRIGHT	Apply a 10-step signal to TP ANR,ANG, ANB.	TP VG and VB	Register setting of SA39h D11 - 8	Adjust the first step levels of the G waveform and the B waveform.	Register setting specs : 8 ± 2 (specs in designing: 8 ± 1) In the Line adjustment 2 mode, SUB BRI B can be used as the adjusting point.
15	B SUB CONTRAST	Apply a 10-step signal to TP ANR,ANG, ANB.	TP VG and VB	Register setting of SA26h D7 - 1	Adjust the 10th step levels of the G waveform and the B waveform.	Register setting specs: 64 ± 3 (specs in designing: 64 ± 2) In the Line adjustment 2 mode, SUB CON B can be used as the adjusting point.
16	R SUB BRIGHT	Apply a 10-step signal to TP ANR,ANG, ANB.	TP VG and VR	Register setting of SA39h D15 - 12	Adjust the first step levels of the G wave form and the R waveform.(Measuring point is the same as that of No,14.)	Register setting specs: 8 ± 2 (specs in designing: 8 ± 1) In the Line adjustment 2 mode, SUB BRI R can be used as the adjusting point.
17	R SUB CONTRAST	Apply a 10-step signal to TP ANR,ANG, ANB.	TP VG and VR	Register setting of SA26h D15 - 9	Adjust the 10th step levels of the G waveform and the R waveform.(Measuring point is the same as that of No,15.)	Register setting specs: 64 ± 3 (specs in designing: 64 ± 2) In the Line adjustment 2 mode, SUB CON R can be used as the adjusting point.
18	Horizon dot position	Any input signal	—	Register setting of SA2Ah D3 - 0	6(0110)	After being written in,the setting value of EEP-ROM is checked. 2 mode, DOT CLK can be used as the adjusting point.
19	Aging	Any input signal	—	—	Keep the unit in the operation mode for 30 minutes or longer.	
20	Flicker	Input a signal for alternate white and black lines to TP ANR, TP ANG and TP ANB.	Screen	Register setting of SA22h D15 - 8	Adjust so that the flickers become minimum in all	If it input a signal for alternate white into TP CVBS, it is possible. (However, adjustment by RGB has priority.) The luminance level of the input signal: 50%. In the flicker adjustment mode, COM DC can be used as the adjusting point.

Flicker adjustment has been deviated The images flicker.

No	Adjustment item	Input	Measuring point	Adjusting point	Measuring method and specs.	Remarks
21	BACK LIGHT DRIVE FREQUENCY	Apply 14.4V ± 0.2V to TP VFL TP GNDFL : GND TP INVPUL : GND TP DIMDTY : GND TP INVBST : GND	TP : FLP2 TP : FLW2	VR 5331	48.0 ± 0.1kHz	100k ohms is connected between TP FLP2 and TP FLW2. It acts as the monitor of the waveform after potential. Don't acts as the monitor of the TP FLW2 directly. (there is a possibility that a measuring instrument may be destroyed, for high voltage.) Out of spec., when frequency change of following may become
22	FREQUENCY CHANGE CHECK	Apply wave of 98.0 ± 1kHz to TP INVPUL 10 ± 2% 5V 0V	TP : FLP2 TP : FLW2		49.0 ± 0.5kHz	It checks that the waveform after potential is set to 49 kHz
23	FREQUENCY CHANGE CHECK	Apply wave of 104.0 ± 1kHz to TP INVPUL 10 ± 2% 5V 0V	TP : FLP2 TP : FLW2		52.0 ± 0.5kHz	It checks that the waveform after potential is set to 52 kHz

●EEPROM setting mode

*) Since this product does not have OSD IC, OSD for adjustment is displayed by using GGF1416 at the time of monitor adjustment.

[Operations]
To enter the setting mode, while keeping the EPRTEST terminal at "Low",
Flicker adjustment mode
Line adjustment 1 mode
Line adjustment 2 mode
Dimmer parameter setting mode

[↑ ↓] button: Used to select a desired adjustment item in each mode
[←→] button: Used to adjust the selected item

Notes:
1) The setting values are written in the EEPROM and then the read-out data is displayed on the screen.
WRITE and READ operations are processed by the block data of 16 bits.
The total bits for the settings depend on adjusting items.
2) For CS (Check Sum) items, when the settings are changed, the CS value is written in 8 bits by applying the exclusive OR (XOR). The CS value is first written in the EEPROM and then the read-out data is displayed.
If the written data is different from the read-out data, the letter color for the read-out data is changed.

● Memory items and addresses on the EEPROM(S-29221BROI-J8T1)

	EEPROM address	Bit15	Bit14	Bit13	Bit12	Bit11	Bit10	Bit9	Bit8	Bit7	Bit6	Bit5	Bit4	Bit3	Bit2	Bit1	Bit0
	00H	Dimmer external light threshold (high)								Dimmer external light threshold (low)							
	01H	Backlight output (upper limit)								Backlight output (lower limit)							
	02H	Common reverse output center (COM DC) PIP SA:22h[B15-8]								Common reserve output amplitude (COM AMP) PIP SA:22h[B7-2]						Don't care	
	03H	Don't care		Output clamp DC (RGB BIAS) PIP SA:23h[B13-8]						Don't care				γ 0 inflection point (GAMMA 0) PIP SA:23h[B3-0]			
	04H	γ 3 inflection point (GAMMA 3) PIP SA:24h[B15-12]				γ 2 inflection point (GAMMA 2) PIP SA:24h[B11-8]				γ 1 inflection point (GAMMA 1) PIP SA:24h[B7-3]					Don't care		
	05H	Output sub contrast R (SUB CON R) PIP SA:26h[B15-9]							Don't care	Output sub contrast B (SUB CON B) PIP SA:26h[B7-1]							Don't care
	06H	Sub brightness R after γ circuit (SUB BRI R) PIP SA:39h[B15-12]				Sub brightness B after g circuit (SUB BRI B) PIP SA:39h[B11-8]				Don't care							
	07H	Don't care								Don't care				Clock phase adjustment (DOT CLK) PIP SA:2Ah[B3-0]			
	08H	Don't care								Don't care					Sharpness (SHARPNESS) PIP SA:05h[B2-1]		Don't care
	09H-1BH	Don't care															
	1CH	Check sum address (00h-1bh)															
	1DH	Don't care								Common reverse output center(Reference)							
	1EH	Don't care												Clock phase adjustment initial value			
	1F-3F	Don't care															
	40	External light of dimmer adjustment(H)								Back light of dimmer adjustment(H)							
	41	External light of dimmer adjustment(M)								Back light of dimmer adjustment(M)							
	42	External light of dimmer adjustment(L)								Back light of dimmer adjustment(L)							
	43-7F	Don't care															

EEPROM initial value

Item	Meaning	initial value(hex)	initial value(DEC)
COM_DC	Common reverse output center	8C	140
COM_AMP	Common reverse output amplitude	1E	30
RGB_BIAS	Out clamp DC	00	00
GAMMA0	γ 0	02	02
GAMMA3	γ 3	04	04
GAMMA2	γ 2	06	06
GAMMA1	γ 1	11	17
SUB_CON_R	Output sub contrast R	40	64
SUB_CON_B	Output sub contrast B	40	64
SUB_BRI_R	Sub brightness R after γ circuit	08	08
SUB_BRI_B	Sub brightness B after γ circuit	08	08
DOT_CLK	Clock phase adjustment	06	06
SHARPNESS	Sharpness	03	03
BL_MAX	Back light output (Max.)	C4	196
BL_MIN	Back light output (Min.)	60	96
REF_HIGH	Dimmer (H)	B0	176
REF_LOW	Dimmer (L)	50	80
LUM_HIGH	External light (H)	E2	226
LUM_MID	External light (M)	87	135
LUM_LOW	External light (L)	43	67
BL_HIGH	Back light (H)	C4	196
BL_MID	Back light (M)	C4	196
BL_LOW	Back light (L)	70	112

[Displays in each mode]

In the following figures, the letters and numbers surrounded by a large square are for OSD examples.
On the screen, the adjustment names and the settings (or written data) are listed.
The settings (or written data) will change when some adjustments are made in each mode.

* The following examples show the maximum values.

(1) Flicker adjustment mode

Adjustment item	Adjustment range	Adjustable name	Settings or written data (DEC)		
Common reverse output center	[0 - 255]	COM DC	255		

(2) Line adjustment 1 mode

Adjustment item	Adjustment range	Adjustable name	Settings or written data (DEC)		
Bright (SA22: B7-2)	[0 - 63]	BRIGHT	63		LINE1
Contrast (SA25: B7-1)	[0 - 127]	CONTRAST	127		
Common reverse output center	[0-255]	COM DC	255		
Common reverse output amplitude	[0-63]	COM AMP	63		
Output clamp DC	[0-63]	RGB BIAS	63		
γ0 inflection point	[0-15]	GAMMA0	15		
γ3 inflection point	[0-15]	GAMMA3	15		
γ2 inflection point	[0-15]	GAMMA2	15		
γ1 inflection point	[0-31]	GAMMA1	31		
				CS	FF

Notes:
1) CONTRAST data
The CONTRAST data is adjustable, and used as reference data for other adjustment items, which is not memorized in the EEPROM.
2) BRIGHT and COM AMP data
The BRIGHT and COM AMP adjustments are made by using the same 2-screen IC register(SA22h B7-2: common reverse output amplitude).
Therefore, adjusting one of the data will change the other one.

(3) Line adjustment 2 mode

Adjustment item	Adjustment range	Adjustable name	Settings or written data (DEC)		
Bright (SA22: B7-2)	[0 - 63]	BRIGHT	63		LINE2
Contrast (SA25: B7-1)	[0 - 127]	CONTRAST	127		
Output sub contrast R	[0 - 127]	SUB CON R	127		
Output sub contrast B	[0 - 127]	SUB CON B	127		
Sub brightness R after γ circuit	[0 - 15]	SUB BRI R	15		
Sub brightness B after γ circuit	[0 - 15]	SUB BRI B	15		
Clock phase adjustment	[0 - 15]	DOT CLK	15		
Sharpness	[0 - 3]	SHARPNESS	3		
				CS	FF

Notes:
1) CONTRAST data
The CONTRAST data is adjustable, and used as reference data for other adjustment items, which is not memorized in the EEPROM.
2) SUB BRI R and SUB BRI B data
The displayed value or EEPROM written data is different from the setting value for the 2-screen IC register (IC4001 : TC90A64AF-P).
(Before displayed on the screen, the setting value is converted via some software.)

Displayed value (adjusting value) (DEC)	E2PROM written value. (DEC)	2-screen IC register setting (BIN)	
15	15	0111	(MAX)
14	14	0110	
· ·	· ·	· ·	
9	9	0001	
8	8	0000	(TIP)
7	7	1111	
· ·	· ·	· ·	
1	1	1001	
0	0	1000	(MIN)

(4) Dimmer parameter setting mode

Adjustment item	Adjustment range	Adjustable name	Settings or written data (DEC)		
Backlight output (MAX)	[0 - 255]	BL MAX	FF		DIMMER
Backlight output(MIN)	[0 - 255]	BL MIN	FF		
Dimmer threshold (high)	[0 - 255]	REF H	FF		
Dimmer threshold (low)	[0 - 255]	REF L	FF		
External light point (high)	[0 - 255]	LUM H	FF		
External light point (middle)	[0 - 255]	LUM M	FF		
External light point (low)	[0 - 255]	LUM L	FF		
Backlight point (high)	[0 - 255]	BL H	FF		
Backlight point (middle)	[0 - 255]	BL M	FF		
Backlight point (low)	[0 - 255]	BL L	FF	CS	FF

Note:
The dimmer point data is memorized in the EEPROM, but not treated as a CS item.
It's because the settings are adjustable by the user.

● Dot Clock Adjustment Mode

[Operations]

· [Dot Clock adjustment mode] starting procedure
  Reset start while pressing the [MAP] and [P. ADJ] Keys together.
· [Dot Clock adjustment mode] cancellation Monitor's microcomputer OFF.
· The operation after this should use Navigation's remote controller.
· [↓↑] button : Used to select a desired adjustment item in each mode.
· [← →] button : Used to adjust the selected item.

[EEPROM : S-29221BROI-J8T1]

The setting values are written in the EEPROM and then the read-out data is displayed on the screen.
WRITE and READ operations are processed by the block data of 16 bits.

[Display]

In the following figures,a large square are for OSD examples.

Dot Clock adjustment mode

Adjustment item	Adjustment range	Adjustable name	Settings or written data (DEC)		
Clock phase adjustment	[0 - 15]	DOT CLK	15		
Clock phase adjustment (initial)	[0 - 15]	[FACTORY	8	]	
Common reverse output center	[0-255]	COM DC	255		
Common reverse output center adjustment (initial)	[0-255]	[FACTORY	140	]	

* CS(Check Sum)display is not performed.

6.7 TEST MODE

● NAVIGATION TEST MODE

1. How to start the test mode

1. When +Battery and ACC are ON, push RESET and EJECT buttons simultaneously.
2. Release RESET button only.
3. When “password entry screen” is displayed, release EJECT button.
4. Enter the password.
5. When the password has been entered, press [ENTER] key.
6. If the correct password has been entered, the test mode menu will be displayed.

* The password entry screen, as the one used in the previous model, is no longer displayed.

<< Password for the service >>
The password is [↑(up)] → [↑(up)] → [↓(down)] → [↓(down)] → [ENTER].
If 8 digits or more are entered and [ENTER] key is pressed, it will be treated as a password error.

• Password entry screen

• Password OK : After 2 seconds or so, the screen will automatically move on to the menu screen.

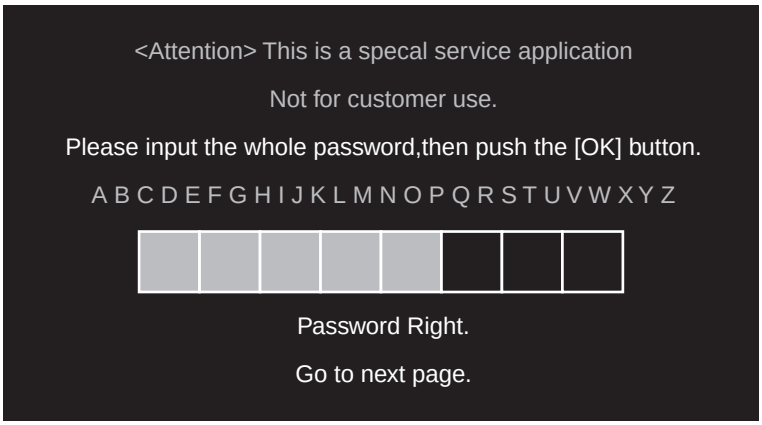

• Password NG : Nothing will be displayed, and reboot action will be taken.

2. Test mode menu

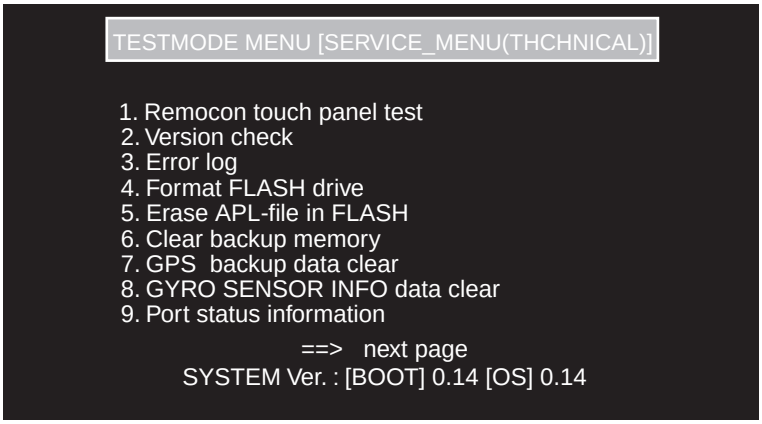

No.	Inspection item	Outline of inspection	Content if inspection
1	Remocon touch panel test	Remote controller touch panel inspection	Calibration setting and remote controller inspection are performed.
2	Version check	Version information check	Display of various version information. (system software, GPS, system microprocessor, microprocessor for mechanism control, microprocessor for timer). The screen will return to “menu” by BACK key.
3	ERROR log	Error history entry	History of system software errors stored in SRAM is displayed. Maximum 8 events from the error last occurred can be displayed. The screen will return to “menu” by BACK key.
4	Format FLASH drive	FLASH format	FLASH domain used by the system soft is initialized. When the job is done, the screen will return to “menu”.
5	Erase APL-file in FLASH	Application file inside FLASH is clear	Application file inside FLASH is clear. *(Except voice data and SRAM backup variable) When the job is done, the screen will return to “menu”.
6	Clear backup memory	Back up variables initialization	SRAM domain used by the system software is initialized. When the job is done, reboot action will be taken.
7	GPS backup data clear	GPS back up data clear	SRAM domain used by GPS is initialized. When the job is done, the screen will return to “menu”.
8	GYRO SENSOR INFO data clear	Learned data inside gyro sensor is clear	Learned data inside gyro sensor is cleared. When the job is done, the screen will return to “menu”.
9	Port status information	Port status display	Port status is displayed. (reverse, parking, pulse, SDRAM capacity.)

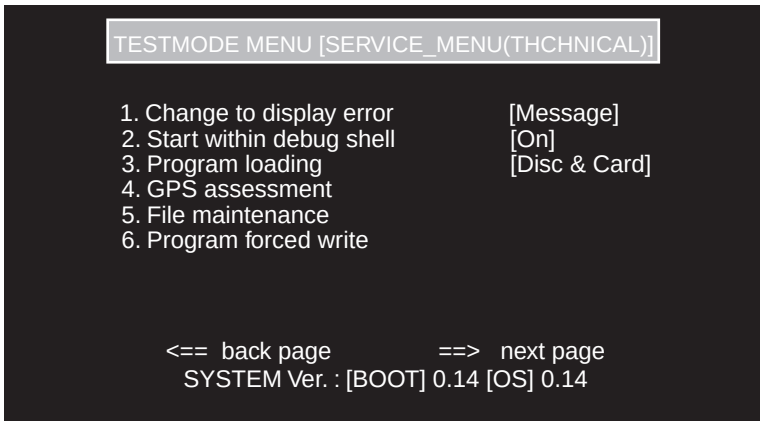

No.	Inspection item	Outline of inspection	Content if inspection		
1	Change to display error	Switching of error information display	Display setting for error cases. (for debugging) Message/Information (error information) selectable.		
2	Start within debug shell	Switching of debug shell start	Setting for debug shell start. (for debugging) Off (no initial start)/On (initial start) selectable.		
3	Program loading	Switching of program loading	Recognition method for boot up program write is changed.		
			Disc (default)	System program	Write when the version No. in the disc is higher.
				System data	Write when the version No. in the disc is higher.
				GPS program	Write when the version No. in the disc is higher.
				Application program	Write when the version information is different from the one in disc.
			Disc & Card (for debug)	System program	Write when the version No. in disc or card is higher.
				System data	Write when the version No. in disc or card is higher.
				GPS program	Write when the version No. in disc or card is higher.
				Application program	Write when the version No. in disc or card is higher.
4	GPS assessment	GPS assessment system start	GPS assessment system can be used. The system will return to “menu” by BACK key.		
5	File maintenance	File maintenance function	File maintenance operations are made. Formatting of SRAM drive and PC card (ATA Flash Card) are made. SRAM data is retrieved and copied to PC card. Data retrieved from SRAM is copied to SRAM from PC card.		
6	Program forced write	Program forced write	Rewriting of SYS (system), GPS (GPS) and APL (application) software are done by force. (Joystick is used) The system will return to “menu” by BACK key.		

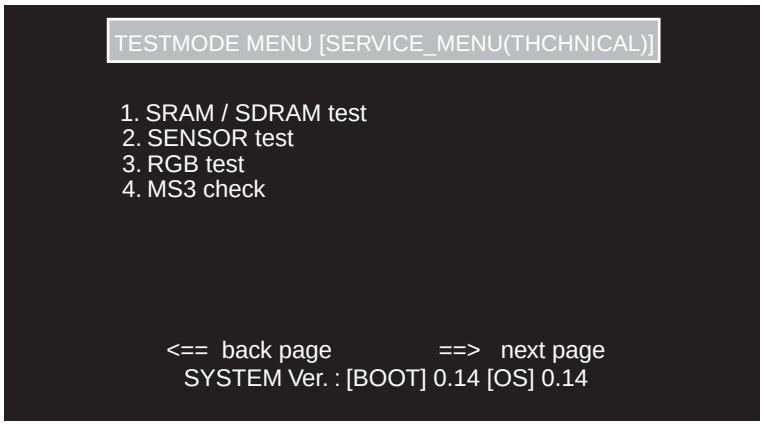

No.	Inspection item	Outline of inspection	Content if inspection
1	SRAM/SDRAM test	Memory inspection	SRAM : Device inspection and bus inspection are performed against all SRAM domains. Data will be protected. (applicable to both 32M and 64M) SDRAM : Device inspection and bus inspection are performed against all SDRAM domains. Data will be protected for both BIOS domain and USER domain. The function for SDRAM all domain inspection will activate by the built-in instruction RAM.
2	SENSOR test	Sensor inspection	G sensor, gyro, power supply voltage and installation condition are displayed. The system will return to “menu” by BACK key.
3	RGB test	Image RGB inspection	RGB inspection (Upper half, 8 colors. Black/blue/red/pink/green/light blue/yellow/white display. Lower half, 3 colors. Red/green/blue.) →red (FULL)→green (FULL)→blue (FULL)→ Switching can be made by [←] and [→] keys. The system will return to “menu” by BACK key.
4	MS3 check	MS3 check [ROM]	MS3 mechanism test mode inspection.

3. How to select test mode menu

Select a desired menu by [↑] and [↓] keys, and execute by pressing [ENTER] key.
Pages can be changed by [←] and [→] keys.

4. Version information

Version No. for BOOT section = X.XX System software does not exist in SDRAM.
Version No. for BOOT section = X.XX Version No. for SDRAM = Y.YY

● Remocon touch panel test

- How to operate the touch panel test mode is described below.
- First, “1. Setup touch-panel effective range“ in the touch panel test menu is made.
- Next, “3. Test Touch-panel“, and if the result is OK, then EXIT the screen.
- If the result is NG, conduct “2. Setup calibration“, and conduct “3. Test Touch-panel“ once again. If the result is OK, then EXIT the screen.
- Furthermore, details of the misalignment can be verified by the “5. Check Touch-panel compensation“.

*) When inspecting the touch panel, use something thin with a round tip such as the touch pen. Furthermore, do not apply excessive force to the touch panel.

Main Menu

```
### Remocon / Touch-panel Test ###

* 1. Setup touch-panel effective range
  2. Setup calibration
  3. Test Touch-panel
  4. Check now calibration condition
  5. Check Touch-panel compensation
  6. Check Touch-panel graphics
  7. Check Touch-panel navi coordinate

[CR]          Menu selection
[JS UP / DOWN] Cursor movement
[BACK]        Back to menu
```

“*” mark shown on the left side of menu item “1” indicates that the setting has been completed. The setting items where “*” is actually indicated will be “1. Setup ~” and “2. Setup ~” only.

[CR]	Enter
[UP/DOWN]	Selection of the inspection item
[BACK]	Return (to the test mode menu)

1. Setup touch-panel effective range

```
### Setup touch-panel effective range ###
The present of the touch-panel effect range (before. after)

min X : ( 37,  36)
max X : (230, 232)
min Y : ( 36,  36)
max Y : (210, 211)
<Caution>
  Please trace a white line.
  Please move to calibration setup after this setup.
```

Adjustment steps

1) Trace the edge of the screen along the monitor resin frame with a round-headed thing to obtain the coordinates.
2) Press the [BACK] key.

Explanation of the displays

min_x(A,B) : X coordinate of the touch panel • minimum value received
max_x(A,B) : X coordinate of the touch panel • maximum value received
min_y(A,B) : Y coordinate of the touch panel • minimum value received
max_y(A,B) : Y coordinate of the touch panel • maximum value received

A = A coordinate which is already stored in the SRAM (If there is no previous data in the SRAM, “min=90, max=180” will be displayed).
B = An updated coordinate which is planned to be set in the SRAM this time (If there is no previous data in the SRAM, “min=90, max=180” will be displayed).
[BACK] : The preset effective range is registered, and the screen will return to the remote controller inspection menu. The data of the effective range will be recorded in the SRAM.

In case the compensation value is not preset in the SRAM, the following initial (default) value will be entered automatically at the time of navigation system boot up.
min_x = 42 (right edge limit value)
max_x = 246 (left edge limit value)
min_y = 49 (bottom edge limit value)
max_y = 238 (top edge limit value)

2. Setup calibration

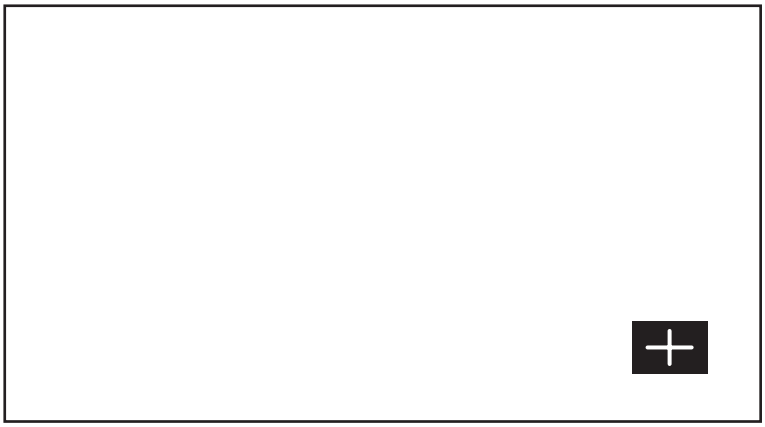

Explanation
- A [+] cursor is displayed at 16 locations on the screen for calibration. Finally, verification of a single point is made. The cursor is always displayed at one location only, and moves on to the next location as the current one is correctly pressed.
- When pressing on the [+] cursor, make sure to press at the center of “+”.
- The result of calibration will be recorded in the SRAM.
- If effective operation is not made for 30 seconds, the system will recognize as “erroneous end” and stops the calibration.

3. Test Touch-panel

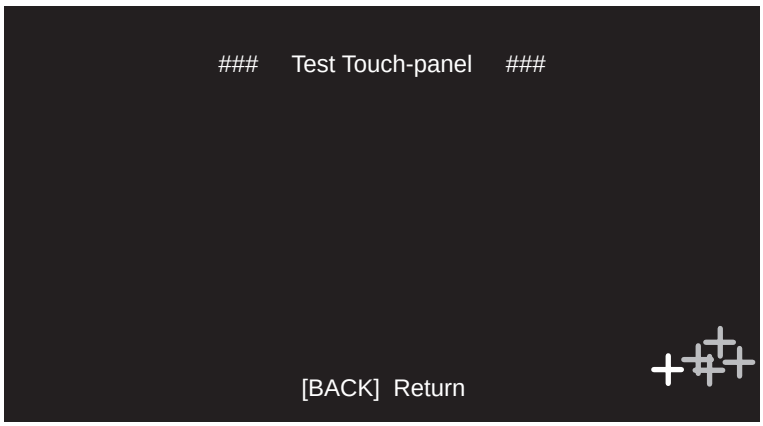

Explanation on touch panel misalignment verification test.

1) The test is intended to verify if the touched point on the touch panel is correctly recognized or not.
   [+] cursor will be displayed at 16 locations on the screen.
   The cursor will be displayed in “white color“ only one at a time.
   Each time the cursor is touched correctly, the next point will be displayed.
   On the other hand, if it is recognized that the point touched was ±4 dots vertically and ±5 dots horizontally away from the center of the displayed [+] cursor, the erroneously recognized coordinate [+] will be drawn in “red color“.
2) When touching the [+] cursor, touch the center of the + mark correctly.
3) If [BACK] is touched, the test will be finished, and the screen will return to the menu screen of the touch panel test mode.

If this test turns out to be NG, it will be necessary to redo “1. Setup touch-panel effective range“ and “2. Setup calibration“. Repeat the above steps once again.

4. Check now calibration codition

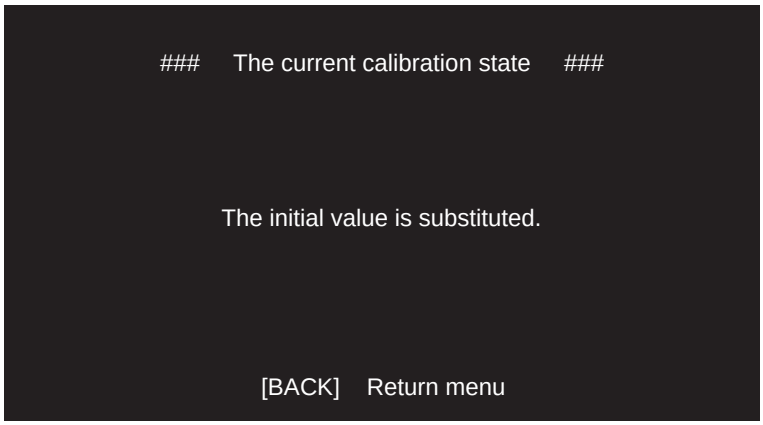

Explanation on the setting status of the calibration compensation value.
The current calibration compensation status is displayed.
The following data will be displayed.
“With no calibration value” (in white characters)
In case the compensation value does not exist in the SRAM.
“The effective range value is stored”
In case the compensation value for the upper limit and the lower limit are preset in the SRAM.
“The calibration compensation value is stored”
In case the calibration compensation values for the 16 points are preset in the SRAM.
“The effective range & calibration value is stored.”
In case the upper limit and the lower limit values and the 16 points calibration values are preset in the SRAM.
“The initial value is substituted.”
In case the value stored as the initial (default) value is preset in the SRAM.
“Error Condition”
In case the SRAM value is demolished or some unexpected situation is happening.

5. Check Touch-panel compensation

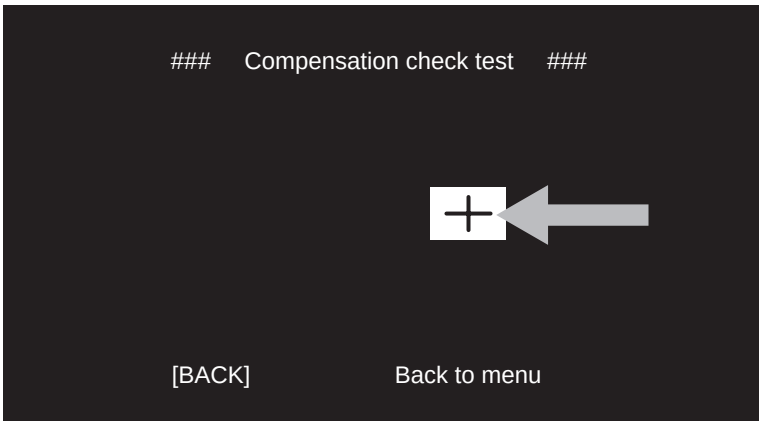

[BACK] : The system will return to the remote controller inspection menu.

Explanation of the inspection details
- Regarding this inspection, the title only will be displayed at the initialized stage.
- As shown by the arrow, press any desired location on the monitor.
- A coordinate after the calibration correction will be displayed by the [+] mark against the coordinate recognized as pressed.

6. Check Touch-panel graphics

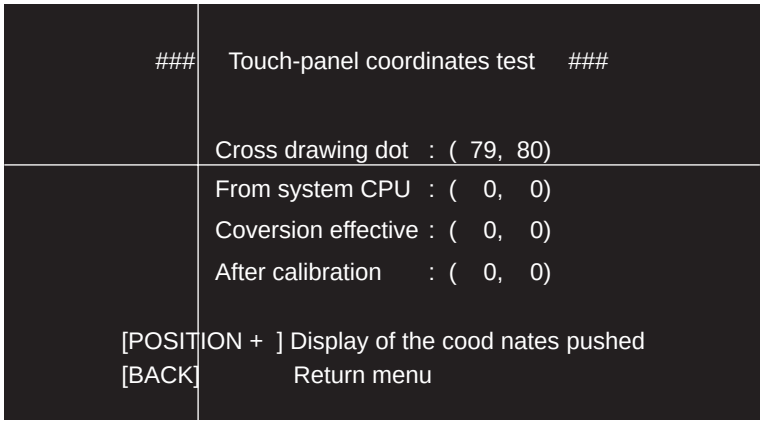

[NAVI] + pressing the touch panel : The coordinate of the touch panel at that time will be displayed.
[↑] : Horizontal line will move upward.
[↓] : Horizontal line will move downward.
[←] : Vertical line will move to the left.
[→] : Vertical line will move to the right.
[BACK] : The system will return to the remote controller inspection menu.

Explanation of the displayed coordinate (from top to bottom)
(79, 80) : Coordinate of the crossing point by the vertical and the horizontal lines (X direction, Y direction). [(0~500, 0~240)]
(0, 0) : AD data value (X direction, Y direction) representing the coordinate of the pressed location received from the system control microprocessor.
(0, 0) : Coordinate (X direction, Y direction) obtained by normalizing the AD data value of the pressed location within the effective range.
(0, 0) : Coordinate (X direction, Y direction) obtained by adding the correction based on calibration to the normalized coordinate.

7. Check Touch-panel navi coordinate

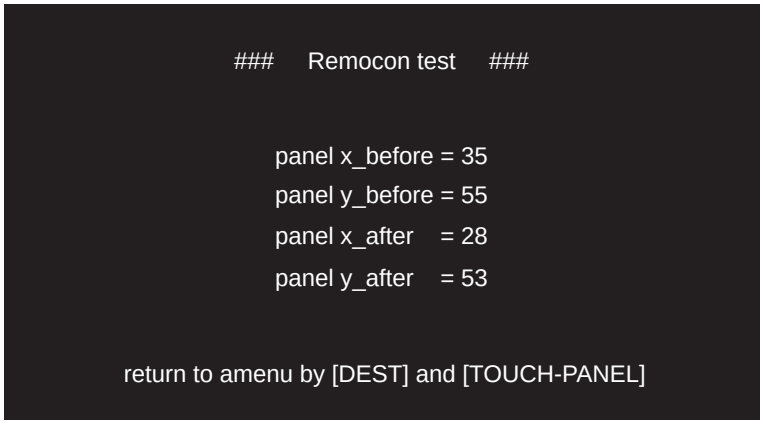

[BACK] + pressing the touch panel will make the system return to the remote controller inspection menu.

Explanation of the displayed content.
panel x_before : X coordinate normalized (expanded) within the effective range.
panel y_before : Y coordinate normalized (expanded) within the effective range.
panel x_after : X coordinate obtained by adding the correction based on calibration.
panel y_after : Y coordinate obtained by adding the correction based on calibration.

● Version check

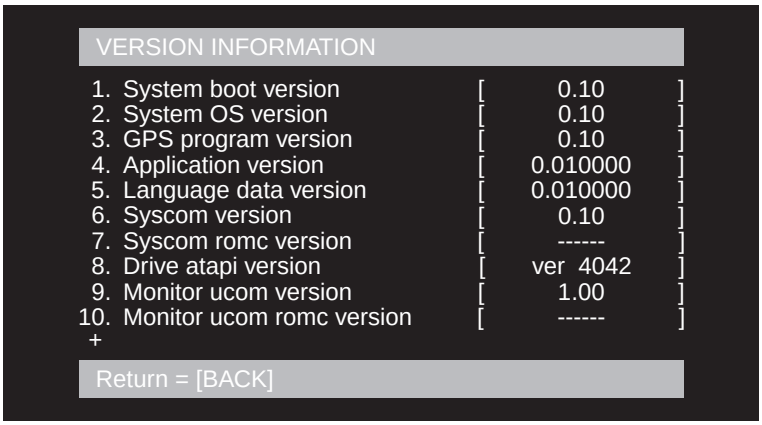

	Item	Content	Information display	File name
1	System boot version	Version information of the system software BOOT section (FLASH) is displayed.	[**.**]→Version information of the system software BOOT section.	UC050BOT.USA
2	System OS version	Version information of the system software OS section (FLASH) is displayed.	[**.**]→Version information of the system software OS section. [NG]→System program does not exist.	UC050SYS.USA
3	GPS program version	Version information of the GPS program (DRAGON) is displayed.	[**.**]→Version information of the GPS program. [NG]→GPS program does not exist.	UC050GPS.PRG
4	Application version	Version information of the application program (SDRAM) is displayed.	[**.**]→Version information of the application program. [NG]→Application program does not exist.	EU050APL.PRG
5	Language data version	Version information of the language data (FLASH) is displayed.	[**.**]→Version information of the language data. [NG]→language data does not exist.	UC050DAT.USA
6	Syscom version	Version information of the system microprocessor is displayed.	[**.**]→Version information of the system microprocessor. [NG]→Communication with the system microprocessor has not been established.	
7	Syscom romc version	Version information of the system microprocessor ROM collection is displayed.	[**.**]→Version information of the system microprocessor ROM collection. [------]→No connection of ROM collection.	
8	Drive atapi version	Version information of the microprocessor of MS3 is displayed.	[**.**]→Version information of the microprocessor of MS3. [NG]→Communication with the microprocessor of MS3 has not been established.	
9	Monitor ucom version	Version information of the microprocessor of monitor is displayed.	[**.**]→Version information of the microprocessor of monitor. [NG]→Communication with the microprocessor of monitor has not been established.	
10	Monitor ucom romc version	Version information of the monitor microprocessor ROM collection is displayed.	[**.**]→Version information of the monitor microprocessor ROM collection. [------]→No connection of ROM collection.	
11	System language	Language of the system program (FLASH) is displayed.	[**.**]→System program file. [NG]→System program does not exist.	UC050SYS.USA
12	Application language	Language data file is displayed.	[**.**]→Language data file. [NG]→Language data does not exist.	UC050DAT.USA

● Error Information

1. Error Information

Descriptions of error information, for errors arising from system software problems, will be provided in this section.
Up to eight sets of information, related to the system software's errors, will be stored in the SRAM.
By executing hi_sysdwn( ) the line number (on which the error occurred), the error code and detailed information of the error, will be stored in the error log.

Hi_sysdwn( ) will be executed in the following two circumstances:

1. hi_sysdwn( ) will be intentionally stored if fatal errors occur with each BIOS.
2. If multiple exceptions, fatal exceptions, illegal command codes and trap command errors occur.

2. Error Log's Entry Function

Up to twenty-four sets of information, related to errors starting with the latest error, will be displayed by the error log entry function.
There are two types of error log displays.
The display will vary when the argument provided to hi_sysdwn( ), depending on whether detailed information (such as program name, version number, creation date, creation time and creator name) exists or not.

1. When detailed information exists:

```
** ERROR INFORMATION **

ERCD  =  00000028(40)
FILE  =  ini_usf.c
LINE  =  510(000001fa)
VERS  =  1.1.1.1
DATE  =  2003/08/08
TIME  =  06:07:26
AUTH  =  daisuke

ERROR-TIME  ffff-ff-ff  ff:ff:ff

     No.4 ← ERROR No.3 → No.2
  Stop when push [BACK] button.
```

ERCD	Error code.
FILE	Error occurring program name.
LINE	Error occurring program line number.
VERS	Error occurring program version number.
DATE	Error occurring program creation date.
TIME	Error occurring program creation time.
AUTH	Error occurring program creator name.
ERROR-TIME	Error occurrence date and time.

2. When detailed information does not exist:

```
** ERROR INFORMATION **

type = 000000b7(183)
ercd = ffffc002(-16382)
inf  = ffb7ac18(-4740072)

ERROR-TIME  ffff-ff-ff  ff:ff:ff
      No.2 ← ERROR No.1 → No.24
  Stop when push [BACK] button.
```

type	Error occurring program line number.
ercd	Error code.
inf	System down information.
ERROR-TIME	Error occurrence date and time.

If an error occurs due to a multiple exception, the definitions will change to the following:

type	Execution address at the time of error occurrence.
ercd	Contributing factor for the exceptions.
inf	Program status word at the time of error occurrence.
ERROR-TIME	Error occurrence date and time.

3. Error Information Switch

The product (with default settings) will display error messages to the user if an error occurs.
Error information can be displayed if an error occurs by switching the error information in the test mode.
In either case, the error log entry display will be the same.

1) Error message display (default settings):

• Setting in the test mode:

```
TESTMODE MENU [SERVICE_MENU(TECHNICAL)]
1. Change to display error  [Message]
2. Start within debug shell  [On]
3. Program loading           [Disc version]
4. GPS assessment
5. File maintenance
6. Program forced write

<== back page    ==> next page
SYSTEM Ver. : [BOOT]0.65 [OS]0.65
```

• Display when an error occurs:

An error has occured.
Please turn power off and on again.

Une erreur a été décelée.
Veuillez éteindre puis rallumer le système.

Fehler.
Bitte System aus- und wieder einschalten.

2) Error information display

• Settings in the test mode:

```
TESTMODE MENU [SERVICE_MENU(TECHNICAL)]
1. Change to display error  [Information]
2. Start within debug shell  [Off]
3. Program loading           [Version up]
4. GPS assessment
5. File maintenance
6. Program forced write

<== back page    ==> next page
SYSTEM Ver. : [BOOT]0.65 [OS]0.65
```

Display when an error occurs:

• If error information exists:

```
** ERROR INFORMATION **

ERCD  =  f f f f f f f f(-1)
FILE  =  tsk_ini.c
LINE  =  152(00000098)
VERS  =  1.11
DATE  =  2003/04/03
TIME  =  04:59:10
AUTH  =  jin

ERROR-TIME  ffff-ff-ff  ff:ff:ff
```

• If error information does not exist:

```
** ERROR INFORMATION **

type = 00000109(265)
ercd = 00000001(1)
inf  = ffe83230(-1560016)

ERROR-TIME  ffff-ff-ff  ff:ff:ff
```

4. Watch dog timer

This product has a built-in mechanism to monitor at a certain interval whether the software is correctly operating or not.
Once this mechanism becomes inoperable, “reset request” will be sent to the power supply microprocessor when a preset time (approximately 4 seconds) has elapsed.
In order to record operational situation of such an occasion, a special code which is not an error code is recorded in the ERCD.

● Port status information

```
Port status information

Reverse        Low
Parking        Low
Pulse            0

[BACK] go to testmode menu.
[NAVI] information renewal.
```

Display	Content of inspection
Reverse	Reverse port status
Parking	Parking port status
Pulse	Pulse status

The pulse number of vehicle speed is indicated at 1/5 value of input frequency for vehicle speed signal.
For example, when vehicle speed signal is 100Hz, the value becomes 20.

How to operate.
[BACK] : Return to the test mode menu.
[NAVI] : Update of the port status.

● GPS assessment

```
GPS TEST
=====================================

FLASH     :Ver.  0. 10     02 / 05 / 10
GPS       :Ver.  3. 09     02 / 03 / 12
SENSOR    :Ver.  5. 56

Press [BACK]  to return
```

FLASH	Display of DRAGON FLASH ROM version information.
GPS	Display of GPS version information.
SENSOR	Display of sensor version information.

● SENSOR test

```
                    SENSOR TEST
=====================================

        G-SENSOR      :      1.9875 [V]
        GYRO          :      2.4804 [V]
        POWER         :     14.9453 [V]
        FIT UP        :       OK(Best)
        DISTANCE      :   SPEED PULSE
        LOW SPEED     :            OK

            Press [BACK]  to return
```

G-SENSOR	Display of G sensor voltage		
GYRO	Display of gyro voltage		
POWER	Display of power supply voltage		
FIT UP	Display of installation status		
	Display	Status	
	• NG	Installation position is NG.	
	• OK	Installation position is OK. (3rd best)	
	• OK (Better)	Installation position is OK. (2nd best)	
	• OK (Best)	Installation position is OK. (Best)	
DISTANCE	Display of distance calculation status.		
	Display	Status	
	• INITIALIZE	Sensor initial learning is under way.	
	• GPS	GPS distance. (Model without G sensor. No pulse connection.)	
	• G-SENSOR	G sensor distance. (simple hybrid.)	
	• ND-PG1	ND-PG1 distance.	
	• SPEED PULSE	Vehicle speed pulse distance.	
LOW SPEED	Display of minimum output speed of a low speed NG vehicle. (Depends on DISTANCE status.)		
	DISTANCE status	SPEED PULSE status	Display
	SPEED PULSE	Low vehicle speed pulse learning is under way.	CHECK
		Low vehicle speed pulse is OK.	OK
		Low vehicle speed is NG.	NG xx[km/h]
	Others		- - - - -

● DVD Test Modes

1. Test mode starting procedure

Please select "MS3 check" to start test mode.

2. Keys used for the DVD test mode

[OK] : Selection decided.
[BACK] : Go back.
Directional keys : [↑ ↓ ← →] keys

3. Test mode flow chart

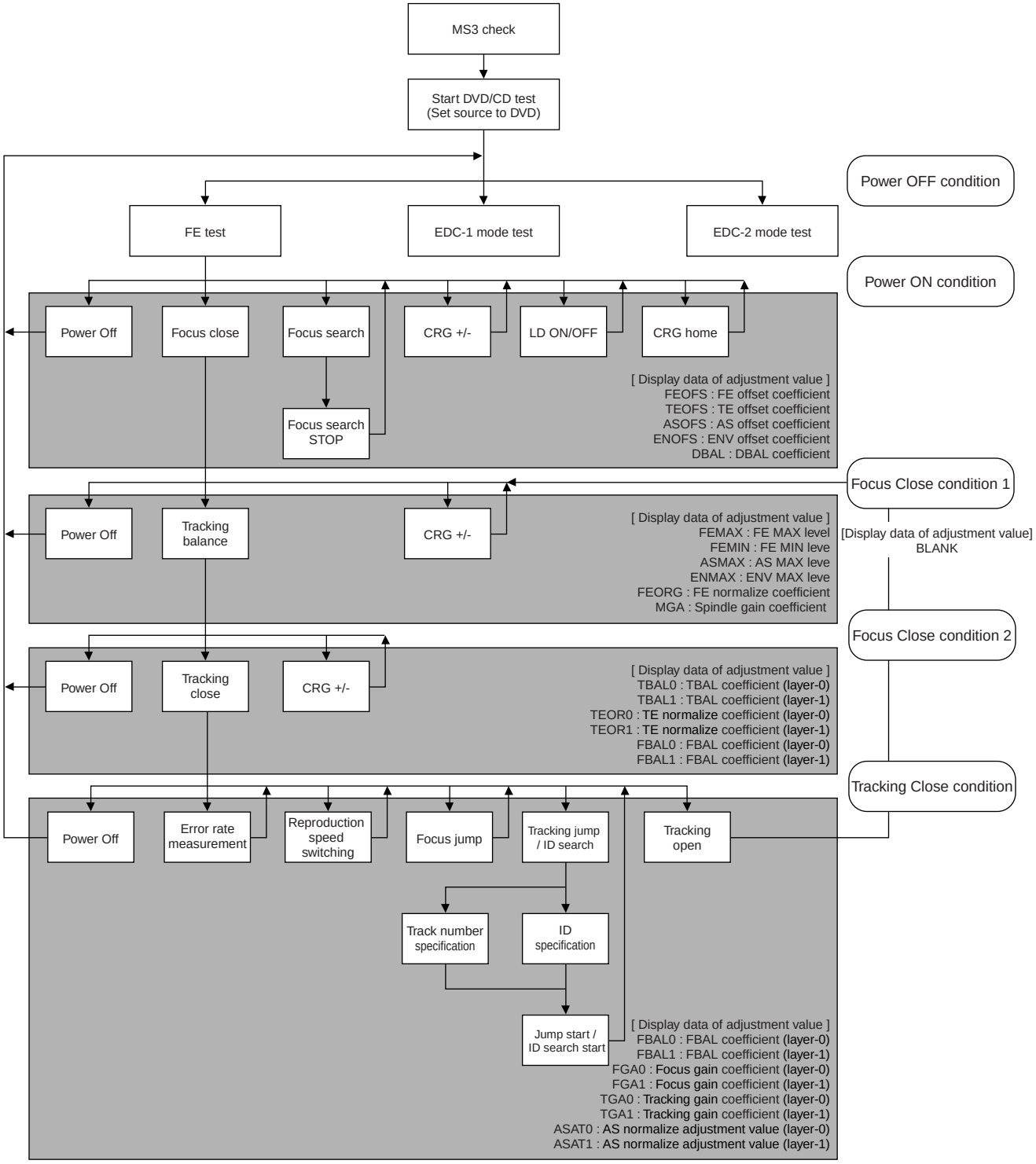

4. Description of test mode

• [X-3055 Test Mode] : Initial screen

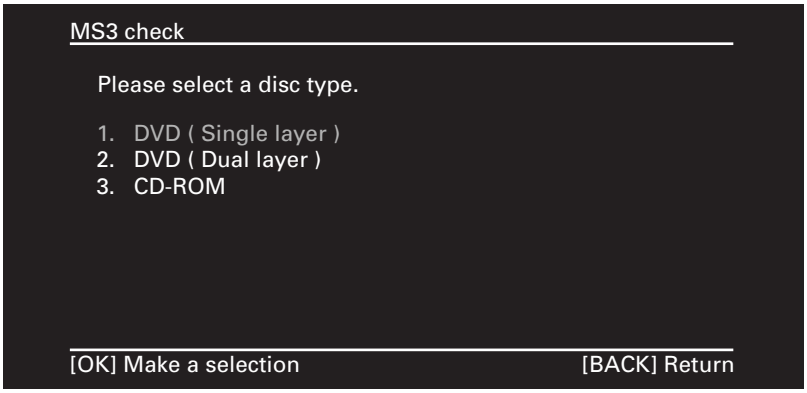

[Direction + Enter]	[1] Starts DVD (single layer) test. (Use a single layer DVD disc.) [2] Starts DVD (dual layer) test. (Use a dual layer DVD disc.) [3] Starts CD test. (Use a CD disc.)
[Return]	Returns to the test mode menu

• [X-3055 Test menu] : Main menu screen

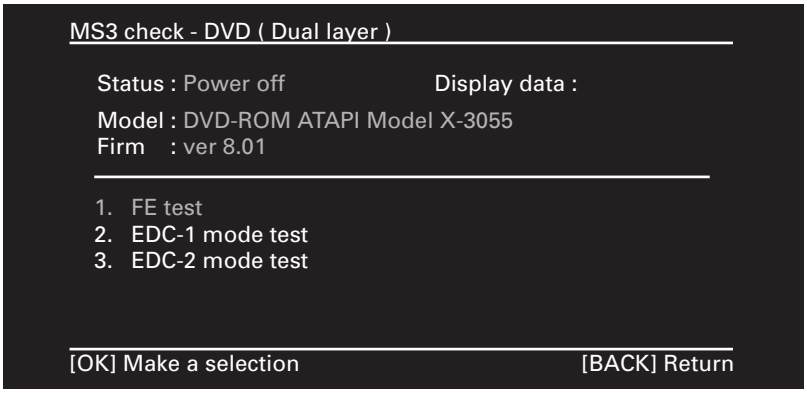

Status : "Power off" under normal condition.
Model : Model name of the drive being used.
Firm : Version number of the drive being used.

[Direction + Enter]	[1] Starts FE test mode. [2] Starts EDC-1 mode test. [3] Starts EDC-2 mode test.
[Return]	Returns to the test mode menu.

• [FE Test menu] : FE test mode menu screen

```
FE test - DVD ( Dual layer )

Status : Power on                    Display data : 00000001

FEOFS  TEOFS  ASOFS  ENOFS  DBAL
FFBE   0100   FD82   FF80   00A5

1. Focus close
2. Focus search  [ Off ]
3. CRG +/- (  Right(+)  /  Left(-)  )
4. LD  [ On ]
5. CRG home

[OK] Make a selection                [BACK] Return
```

Status : "Power on" under normal condition.
Display data : Displays an error code in case of an error.
Adjusted value : See the Test Mode Flow Chart for the contents of adjusted values.

[Direction + Enter]
[1] Focus close (Turn the LD on before execution.)
[2] Focus search (Turn the LD on before execution.)
Toggle ON/OFF with [Enter] key.
[3] Carriage adjustment
The carriage moves outward with [→] key and moves inward with [←] key.
[4] LD switching
Toggle ON/OFF with [Enter] key.
[5] Moves the carriage to the home position.

[Return] Returns to the main menu.

• [FE Test 2] : FE test mode screen (focus close)

```
FE test - DVD ( Dual layer )

Status : Focus close                 Display data : 00000000

FEMAX  FEMIN  ASMAX  ENMAX  FEORG  MGA
1CBE   DD3E   1942   3900   02FD   02F9

1. Tracking balance
2. CRG +/- (  Right(+)  /  Left(-)  )

[OK] Make a selection                [BACK] Return
```

Status : "Focus close" under normal condition.
Display data : Displays an error code in case of an error.
Adjusted value : See the Test Mode Flow Chart for the contents of adjusted values.

[Direction + Enter]
[1] Tracking balance
[2] Carriage adjustment
The carriage moves outward with [→] key and moves inward with [←] key.

[Return] Returns to the main menu.

• [FE Test 3] : FE test mode screen (tracking balance)

```
FE test - DVD ( Dual layer )

Status : Focus close                    Display data : 00000000

TBAL0  TBAL1  TEOR0  TEOR1  FBAL0  FBAL1
0000   0000   01B8   01B9   0000   0000

1. Tracking close
2. CRG +/- (  Right(+)  /  Left(-)  )

[OK] Make a selection
```

Status : "Focus close" under normal condition.
Display data : Displays an error code in case of an error.
Adjusted value : See the Test Mode Flow Chart for the contents of adjusted values.

[Direction + Enter]
[1] Tracking close
[2] Carriage adjustment
The carriage moves outward with [→] key and moves inward with [←] key.

[Return] Returns to the main menu.

• [FE Test 4] : FE test mode screen (tracking close)

```
FE test - DVD ( Dual layer )

Status : Tracking close                 Display data : 00000000

FBAL0  FBAL1  FGA0  FGA1  TGA0  TGA1  ASAT0  ASAT1
0000   E200   0200  01F2  0200  0233  031C   0333

1. Error rate     [ - - - - - - - - ]
2. Read speed [ - - - - - - ]
3. Focus jump [ Layer - ]
4. Track jump  /  ID search
5. Tracking open ( Focus close status )

[OK] Make a selection                    [BACK] Return
```

Status : "Tracking close" under normal condition.
Display data : Displays an error code in case of an error.
Adjusted value : See the Test Mode Flow Chart for the contents of adjusted values.

[Direction + Enter]
[1] Error rate measurement
Displays the error rate by index (X.XXXE-X).
(Other operations cannot be executed during error rate measurement.)
[2] Playback-speed switching
Toggle (DVD x2.5CAV/ x1CLV, CD x10CAV/ x2CLV) with [Enter] key.
Display data : 00000000 = CAVx1
00000001 = CLVx1
00000002 = CAVx10
00000003 = CLVx2
[3] Focus jump
Toggle (Layer 0/1) with [Enter] key.
Display data : 00000000 = Layer 0
00000001 = Layer 1
[4] Track jump/ID search
Toggle ON/OFF with [Enter] key.
[5] Track opening
Clears the adjusted value display and moves to the focus close status.

[Return] Returns to the main menu.

• [FE Test 5] : FE test mode screen (track jump/ID search)

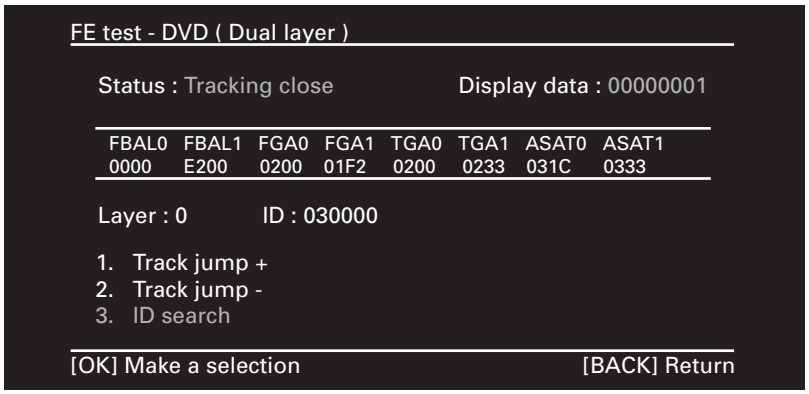

[Direction + Enter]
[1] Backward track jump
[2] Forward track jump
Select the number of tracks to be jumped with [Direction] key. Press [Enter] key to execute the jump.
[3] Searching the specified layer and ID
Select the layer and ID (address) to be searched with [Direction] key. Press [Enter] key to execute the search. Specify the address in "mmssff (minute: second: frame)" for CD-ROM.

[Return] Returns to the tracking close status.

• [EDC-1/EDC-2 test menu] : EDC-1/EDC-2 Test Menu screen

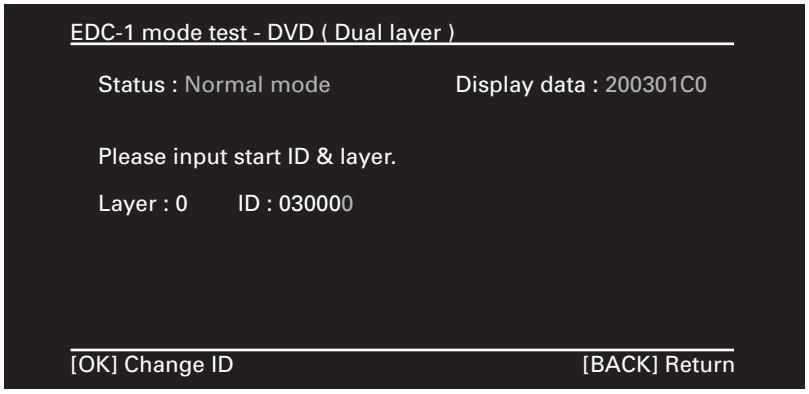

EDC-1 : Executes EDC test continuously.
EDC-2 : Executes EDC test by block unit.

Status : "Normal mode" under normal condition.
Adjusted value : See the Test Mode Flow Chart for the contents of adjusted values.

Layer : Layer being tested
ID : ID being tested

[Direction + Enter] Select the layer and ID (address) of the jump destination with [Direction] key. Press [Enter] to execute the jump. Specify the address in "mmssff (minute: second: frame)" for CD-ROM.

[Return] Returns to the main menu.

• Display data (Error code)

E0000000 : Overrun error (Communication error)
E0010000 : Framing error (Communication error)
E0020000 : Writing, setting error (An error has occurred at the time of setting M62 CRAM, a command, etc.)
E0030000 : Parameter error (Set parameter is invalid.)
E0040000 : Command error (Set command is invalid.)
E0060000 : Command uncompleted
E0100000 : Decode normally completed (Decode has been normally completed from the specified ID to the final target ID in EDC mode.)
E0FFFF00 : Hard reset or soft reset

The followings are valid only during error rate measurement or in EDC mode

E0015300 : Media Load or Eject Failed (Mechanical error)
E0018000 : High Temperature (High temperature sense)
E0018100 : Voltage Out of Range (VD power supply failure)
E0023A00 : Medium Not Present (No disc)
E0030200 : No Seek Complete (Seek failure)
E0031100 : Unrecovered Read Error (Formatter Error, CRC (EDC) Error, Uncorrectable Error, etc.)
E0030900 : Track Following Error (Servo failure)

In case that the above error codes cannot be obtained, ATAPI BIOS error code will be displayed.

[ATAPI BIOS error code]

Error code name	Return value	Description
NO_ERROR	00000000H	Completed
ERR_ATAPI_RSV	ffff1000H	Reserved
ERR_ATAPI_DNR	ffff1001H	Device has not been prepared. Device has not completed TOC search, etc.
ERR_ATAPI_ANF	ffff1002H	The target address has not been found.
ERR_ATAPI_HEAT	ffff1003H	The device temperature is out of operational range.
ERR_ATAPI_MECHA	ffff1004H	Device cannot be operated because of any mechanical reason. Device has not been found on ATAPI bus.
ERR_ATAPI_NODISC	ffff1005H	Disc has not been found.
ERR_ATAPI_PARAM	ffff1006H	An error has been found in parameter or command.
~~ERR_ATAPI_REENT~~	ffff1007H	A reentrant prohibition violation has occurred.
ERR_ATAPI_DISC	ffff1008H	Disc error A command for data has been issued to an audio track. Access to an unreadable disc such as reversely inserted disc.
ERR_ATAPI_TMOUT	ffff1009H	Time out No response from device for a certain period of time.
ERR_ATAPI_DATA	ffff100aH	Error cannot have been corrected.
~~ERR_ATAPI_EJECT~~	ffff100bH	Disc has been ejected.
ERR_ATAPI_DCHG	ffff100cH	Disc change history exists. Disc change has been executed since the last command.
ERR_ATAPI_MODE	ffff100dH	X-3055 mode error A command for test mode has been issued in Normal mode, or other way round.
ERR_ATAPI_OFF	ffff100eH	ATAPI BIOS is OFF.
ERR_ATAPI _TEST	ffff100fH	An error has occurred with ATAPI_TEST command.

[ATAPIBIOS <-> MS3 error code association table]

ATAPI BIOS ERROR CODE	Sense Key	ASC	Comment
ERR_ATAPI_PARAM	0X05 Illegal Request	0X24	Inquiry, Mode Sense, Mode Select, Read DVD Structure
		0X1A	Mode Select
		0X26	Mode Select
		0X39	Mode Sense
		0X20	
	0X0B Aborted Command	0X4E	
ERR_ATAPI_ANF	0X05 Illegal Request	0X21	Seek, Read(12)
ERR_ATAPI_MECHA	0X01 Recovered Error	0X53	
	0X04 Hardware Error	0X85	
ERR_ATAPI_HEAT	0X01 Recovered Error	0X80	
ERR_ATAPI_NODISC	0X02 Not Ready	0X3A	
ERR_ATAPI_DNR	0X02 Not Ready	0X04	
	0X06 Unit attention	0X29	
ERR_ATAPI_DISC	0X02 Not Ready	0X30	
	0X03 Medium Error	0X02 0X09	
	0X05 Illegal Request	0X30 0X64	
ERR_ATAPI_DATA	0X03 Medium Error	0X11	
ERR_ATAPI_DCHG	0X06 Unit attention	0X28	

6.8 USING THE TEST DISC

TEST DISC Part No. : GGV1237

REMOTE CONTROLLER Part No.

Part No.	Description
CXB7427	Co-packed remote controller with AVIC-8DVD/EW
CXB7426	Co-packed remote controller with AVIC-9DVD/EW, UC
CXB9118	Co-packed remote controller with AVIC-8DVD-2/EW, -9DVD-2/EW, -90DVD/UC
CD-R11	Optional remote controller

1. Start/End

1-1. Start

When the test disc is inserted, the title “NN642 TEST DISC” will be displayed.
If [RETURN] key is pressed while the title is being displayed, the menu screen will be displayed. If no key is pressed, the first screen of the inspection screen for line will be displayed.

Title screen

1-2. End

No action is taken.

2. Key operation

• In the case of inspection screen for line

1. The inspection screen and the menu screen can be switched alternately using the [CR] key on the remote controller.
2. The screen will go back to the previous screen by the [↑] key on the remote controller.
3. The screen will move forward to the next screen by the [↓] key on the remote controller.
   (Unless the inspection is finished, the screen will not move forward. The screen will not move forward, too, if there is an NG item.)

* Refer to the explanation of each screen for the details.

• In the case of service menu screen

1. Select an inspection item by the [↑] and [↓] keys on the remote controller, and inspection screen will appear when the [CR] key is pressed.
2. When the [RETURN] key on the remote controller is pressed, the screen will go back to the menu screen.

* Refer to the explanation of each screen for the details.

Menu screens

```
--- Self Test Menu ---

1. External Connection
2. Data Communication (Short)
3. Data Communication (Open)
4. Natural Drawing & Rear View
5. VTR In check
6. GPS  Self check
7. Software version display

[CR KEY] The selected menu is started.
```

```
--- Self Test Menu ---

 8. Language Flag setup mode
 9. Memory all cleay
10. GPS sensitivity measurement
11. Picture RGB check
12. GPS information
13. Sound play
14. File Maintenance mode

[CR KEY] The selected menu is started.
```

```
--- Self Test Menu ---

15. Picture check
16. Device check(Design engineer only)
17. Memory all clear (for Service)
18. BackUp Memory clear

[CR KEY] The selected menu is started.
```

3. Inspection screen

1. Connection check

```
1. Connection check
Illumination signal                                  OFF
Parking brake signal                                 ON
Reverse gear signal                                  NOR
Car speed signal                                     0
Battery voltage                                      12.3V
Gyro voltage / sigma                 2.450V OK  /  1.1 OK
GSENS voltage / sigma                2.050V OK  /  1.1 OK
Heading                                              CONST
Pitch                                                CONST
Remote controller                                    --
Body key                                             MENU
K mode                                               OFF
[joy stick down] It progresses to the next inspection.
```

- The status of the item indicated in the above figure will be updated every second.
- When the gyro is in operation, a BEEP sound will be made when the G sensor is activated.
  Right: 500Hz, Left: 700Hz. Up: 800Hz, Down: 600Hz
- Conditions for moving on to the next inspection
  Illumination status is changing between ON and OFF.
  Parking brake status is changing between ON and OFF.
  Reverse status is changing between NOR and REV.
  Pulse is changing to a value other than 0/0.
  All keys on the main body as listed below have been pressed at least once.
  "DEST", "INFO", "MEMO", "TRAFFIC"
  The value of the gyro changes to right and left at least once for each.
  * Until it changes at least once for each, “--” is displayed even when it is OK.
  (ex.) When the orientation status is left rotation level 1, it is displayed as below.
  Heading Left </ Right
  (ex.) When the orientation status is uphill inclination level 1, it is displayed as below.
  Pitch Upper +/ Lower
  After the value of the gyro changes to right and left at least once for each, the dispersion of the gyro is OK for five consecutive seconds or longer.
  * “CHK” is displayed during continuous inspections.
  The voltage of the gyro, and the voltage and temperature of the temperature sensor are OK.
  K mode status is changing between ON and OFF.
  * K mode is for develop use. K mode status must be "OFF" for normal operation.

Standard value for other items
- GYRO voltage
  OK: 2.5±0.15 USABLE: 2.5±0.30
- GYRO variation
  OK: Less than 30
- G sensor voltage
  OK: 2.0±0.25 USABLE: 2.0±0.40
- G sensor variation
  OK: Less than 80

- Only when all the conditions are met, you can move on to the next inspection by the [↓] key on the remote controller. It should be noted, however, that you will not be able to move on to the next inspection if there is an error (background color is red) even if the conditions are met.

<Supplemental explanation regarding error display>

Displayed message	Details of the error
No connection to DRAGON	An error when communication with DRAGON cannot be established. Communication error due to a hardware problem could be the cause. It is highly possible that the hardware on the DRAGON side is defective.
Command error	Time out error for response to BIOS call. Communication error due to a hardware problem could be the cause. It is highly possible that the hardware on the DRAGON side is defective.
Unknown error	Error due to unknown reason.

2. Data Communication (Short Circuit) check (Not for service)

```
2. Data Communication (Short Circuit) check

Serial  I/O  #5(for Extension)        OK
Serial  I/O  #7(for Debug)            OK

[joy stick down] It progresses to the next inspection.
```

- SIO connection short is checked.
- Loop back check is performed on 5CH and 7CH.
- Wait screen is displayed until the checking is completed.
- When [RETURN] key on the remote controller is pressed while the inspection result is being displayed on the screen, inspection will be performed once again.
- Only in the case of OK, you can move on to the next inspection by the [↓] key on the remote controller.

3. Data Communication (Open Circuit) check (Not for service)

```
3. Data Communication (Open Circuit) check

Serial  I/O  #5(for Extension)        OK
Serial  I/O  #7(for Debug)            OK

[joy stick down] It progresses to the next inspection.
```

- SIO connection open is checked.
- Check is performed on 5CH and 7CH.
- Do not connect anything to the terminal. OK will be indicated under “open” condition.
- Wait screen is displayed until the checking is completed.
- When [RETURN] key on the remote controller is pressed while the inspection result is being displayed on the screen, inspection will be performed once again.
- Only in the case of OK, you can move on to the next inspection by the [↓] key on the remote controller.

4. Natural Drawing & Rear View

- Natural image consisting of 256 colors will be drawn on the BG screen.
- ADPCM 1kHz sine wave at the sampling rate of 19kHz will be output for 30 seconds.
- Rear view image will be displayed on the right hand side of the screen.
- Volume level can be changed by the [←] and [→] keys on the remote controller. (0 to 9)
  [JPEG file name: ZHITO1.JPEG]
  [Voice file name: A19K01KS.WAV]
- You can move on to the next inspection by the [↓] key on the remote controller.

5. VTR check

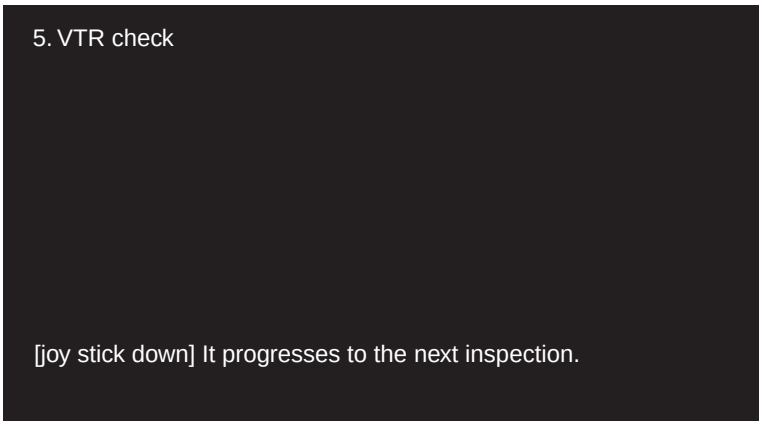

- External input image (VTR input image) is displayed and voice is outputted.
- You can move on to the next inspection by the [↓] key on the remote controller.

6. GPS Self check

```
6. GPS Self check

                                    2004/11/24 15:00:00
Using satellites NO.
 01  02  03  04  05  06  07  08
 Antenna connection                                  OK
 Receiving signal level                            13.5
 Latitude                                   3D  35  55  47.1
 Longitude                                     139  28  30.0


 [joy stick down] It progresses to the next inspection.
```

- GPS receiving status will be displayed.
- Conditions to move on to the next inspection.
  Antenna connection is OK.
  Data is received from one or more satellite.
  Time is being displayed.
- When all the conditions are met, the background color will change to blue.
- Only when all the conditions are met, you can move on to the next inspection by the [↓] key on the remote controller.

It should be noted, however, that you will not be able to move on to the next inspection if there is an error (background color is red) even if the conditions are met.

<Supplemental explanation regarding error display>

Displayed message	Details of the error
No connection to DRAGON	This is an error when communication with DRAGON is not established. Communication error due to a hardware problem could be the cause. It is highly possible that the hardware on the DRAGON side is defective.
Command error	Time out error for response to BIOS call. Communication error due to a hardware problem could be the cause. It is highly possible that the hardware on the DRAGON side is defective.
Invalid data	This is an error when request is made while the data for response is not prepared (not obtained from DRAGON). Communication error due to a hardware problem could be the cause. It is highly possible that the hardware on the DRAGON side is defective.

7. Software version

```
7. Software version

   System boot / OS version          0.17 / 0.17
   Syscom version                    6.10
   Monitor ucom version              6.01
   Drive apl version               ver 4032
   GPS program version               5.08  04/04/01  4.10
   GPS model                   05UC  DVD  (0x29)

   Calibration check                 OK


   [joy stick down] It progresses to the next inspection.
```

- It indicates the version information of the software.
- Conditions to more on to the next inspection.
  "GPS model" is "05UC DVD".
  "Calibration check" is "OK". OK : "Setup touch panel effective range" in Testmode is done.
- Only when all the conditions are met, you can move on to the next inspection by the [↓] key on the remote controller.

It should be noted, however, that you will not be able to move on to the next inspection if there is an error (background color is red) even if the conditions are met.

8. Language selection flag initialize

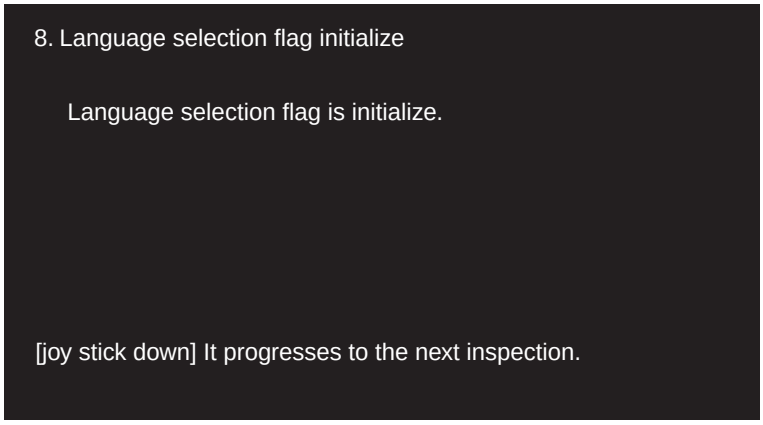

- When the system enters into this inspection, language selection will be set to the original setting made at the time of shipment (i.e. no setting).
  * The setting is made to display the screen for selecting the language to be used at the initial boot up after the shipment out of the factory.
- The setting is made when the system enters into this inspection.
- You can move on to the next inspection by the [↓] key on the remote controller.

9. All memory clear (Not for service)

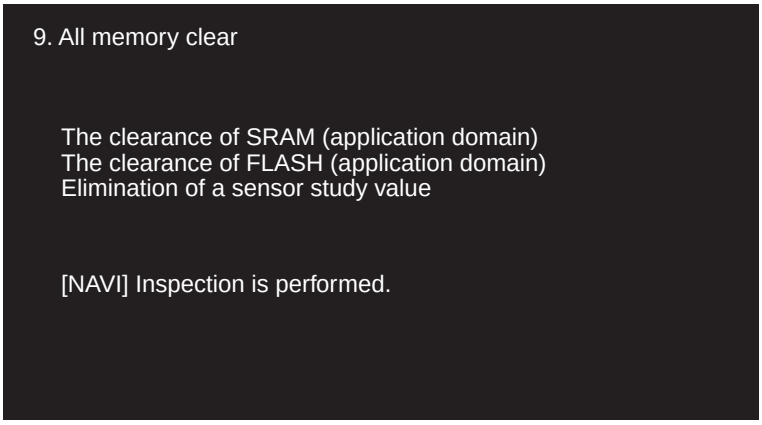

- SRAM (application domain) is cleared.
- FLASH (application domain) is cleared.
- Sensor learning level is cleared.
- If SRAM clear is not successful, FLASH will not be cleared.
- After the inspection screen is displayed, the above process is executed by the [NAVI] key on the remote controller.
- The result of the process is displayed.
- Only when everything is OK, you can move on to the next inspection by the [↓] key on the remote controller.

10. GPS sensitivity measurement

10. GPS sensitivity measurement

Satellite NO. 3 [<- -> to select satellite]

CH.	Look	SNR(AMU)	SNR(dB)
1	OK	12.3	23.4
2	OK	12.3	23.4
3	OK	12.3	23.4
4	OK	12.3	23.4
5	OK	12.3	23.4
6	OK	12.3	23.4
7	OK	12.3	23.4
8	OK	12.3	23.4
ALL	OK	Sensitivity:	20.4(db)
		DoppRMS:	1.78(Hz)

[joy stick down] Raw work inspection is ended.

- GPS can be changed by the [←] and [→] keys on the remote controller.
- Sensitivity of the selected GPS is displayed by the [RETURN] key on the remote controller.
- Production engineering inspection is ended and service menu is displayed by the [↓] key on the remote controller.

<Supplemental explanation regarding error display>

Displayed message	Details of the error
No connection to DRAGON	This is an error when communication with DRAGON is not established. Communication error due to a hardware problem could be the cause. It is highly possible that the hardware on the DRAGON side is defective.
Command error	Time out error for response to BIOS call. Communication error due to a hardware problem could be the cause. It is highly possible that the hardware on the DRAGON side is defective.

11. Picture RGB check

- RGB bridge is inspected.
- The screen can be switched by the [←] and [→] keys on the remote controller.
- RGB is drawn in the pattern of R 100% → R 50% → G 100% → G 50% → B 100% → B 50%.
- Total of 6 screens will be displayed.

12. GPS information

```
12. GPS information

 0D   T2   H25.5  V25.5                 01/03/28 23:05:47
 SV    Azi    Ev   SNR   Flag   Acc   Doppler   SrchW
 10    119    39   3.0   UY--    3     -2249     2883
 26     25    60   4.9   UYC-    2     -1051     3496
 18    310    25   0.0   ---m    f        +0    12487
 23    305    33   0.0   ---m    f        +0    21812
 17    317    49   0.0   ---m    f        +0    21812
  9    196    56   0.0   ---m    f        +0    21812
 14    260    73   0.0   ---m    f        +0     5994
  4    142    81   0.0   ---m    3        +0     5994

Position  Sv Stat  Ver & Diag  Err Info
```

- ”Position information” will be displayed when the cursor is at the “Position” position and the [CR] key is pressed on the remote controller.
- “Status information” will be displayed when the cursor is at the “Sv Stat” position and the [CR] key is pressed on the remote controller.
- “Diagnosis information” will be displayed when the cursor is at the “Ver&Diag” position and the [CR] key is pressed on the remote controller.
- “Error information” will be displayed when the cursor is at the “Err Info” position and the [CR] key is pressed on the remote controller.
- When an inspection is performed, “status information” (the screen shown above) will be displayed first.

13. Voice play back

```
13. Sound play

   ADPCM fixation 11K 1K L
   ADPCM fixation 11K 1K mono
   ADPCM fixation 11K 1K R
   ADPCM fixation 11K 1K ste
   ADPCM fixation 19K 1K L
   ADPCM fixation 19K 1K mono
   ADPCM fixation 19K 1K R

  Main fader Vol.[0-15]          6

  [-> Vol up, <- Vol down]
  [return] It returns to a menu screen.
```

- Voice file (WAVE format) will be played back.
- The voice selected by the [CR] key on the remote controller will be played back.
- Volume level can be changed by the [←] and [→] keys on the remote controller.

14. File maintenance

```
14. File maintenance

Totale Capacity :   216.5K  Remain :   216.3K
Media:SRAM: Path:
   LOGINFO.CFG 20            84 02 / 08 / 07  17:35
   LOCPOS .DAT 20            68 01 / 01 / 01  21:22



[1]Media  [2]Copy  [3]Delete  [4]Dump  [0]Help
```

- File can be copied, deleted or dumped.
  Refer to HELP for “how to use” each function.

15. Picture check MENU

```
15. Picture check MENU
                                  1/2

   1. Plane
   2. Color Bar
   3. Cross Hatch
   4. Sweep
   5. Step
   6. Ramp
   7. Window
   8. Mono Scope
   9. Vertical Resolution Column

   [Push OK to make a selection]
   [return] It returns to a menu screen.
```

A pattern is selected by the [↑] and [↓] keys and an image is displayed by the [CR] key.

1. Plain
   ...Display is made in the order of black, blue, red, pink, green, light blue, yellow and white by the [←] and [→] keys operation on the remote controller.
2. Color bar
   ...White, yellow, light blue, green, pink, red, blue, black bars will be displayed from left to right.
3. Cross hatch
4. Sweep
5. Step
6. Lamp
7. Window
8. Mono scope
9. Cycle line 1
10. Cycle line 2
11. Horizontal stripe 1
12. Horizontal stripe 2
13. Chinese character pattern
14. Map (map.jpg)
15. Natural image (nature.jpg)
16. Portrait 1 (hito1.jpg)
17. Portrait 2 (hito2.jpg)

16. Device Check

```
16. Device Check

  1. SDRAM (0X48000000  -  0X4BFFFFFF)
  2. SRAM  (0X42000000  -  0X4203FFFF)
  3. ASIC  (0X43000270  -  0X43000274)
  4. ALL Device

  [return] It returns to a menu screen.
```

- The device inspection above is performed only for engineering.
- (Device selection)
  Select a device with the [↑] and [↓] keys on the main unit, and decide with the [CR] key.
- (Pattern selection)
  Select a pattern with the [↑] and [↓] keys on the main unit, and start the inspection with the [CR] key.
  * Only when ASIC is selected, the bit shift pattern can be selected.
  Return to the device selection screen with the [RETURN] key on the main unit.
- (During the inspection)
  Stop the inspection with the [RETURN] key on the main unit, and return to the device selection screen.

17. All memory clear (for Service)

```
17. All memory clear (for Service)

  The clearance of SRAM (application domain)
  The clearance of FLASH (application domain)

  [NAVI] Inspection is performed.
  [return] It returns to a menu screen.
```

- SRAM (application domain) is cleared.
- FLASH (application domain) is cleared.
- If SRAM clear is not successful, FLASH will not be cleared.
- After the inspection screen is displayed, the above process is executed by the [NAVI] key on the remote controller.
- The result of the process is displayed.

18. Initialization of a backup variable

18. Initialization of a backup variable

A backup variable is initialized.

Cautions
System reset is carried out after initialization.

[NAVI] A backup variable is initialized.
[return] It returns to a menu screen.

- Back up variables are initialized by the [NAVI] key on the remote controller for system reset.
- The screen will return to the menu screen by the [RETURN] key on the remote controller.

7. GENERAL INFORMATION

7.1 DIAGNOSIS

7.1.1 DISASSEMBLY

A

● Removing the Case (not shown)

1. Remove the two screws and then remove the Case.

● Preparation for Removing the Grille Assy

To remove the Grille Assy block, it must always be moved to the OPEN position.

1. Rotate the gear using a screwdriver, etc. (ø2.8 or smaller) from the slit on the bottom surface of the main unit (Fig.1) in the direction of the arrow, and move the Grille Assy to OPEN position.

B

Note)
Though the gear is heavy, please turn carefully not to inflict too much force. Turning with excessive force may cause damage in the rack or gear in the driving section.

C

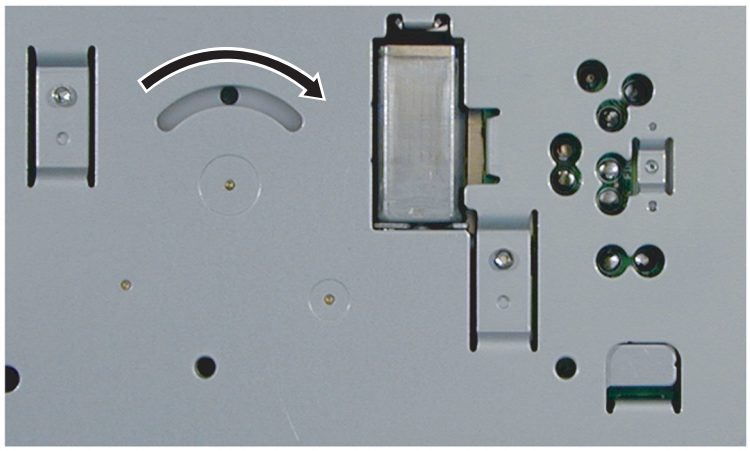

FRONT

Fig.1

D

E

F

● Removing the Monitor Assy

1 Remove the two screws. (Fig.2)

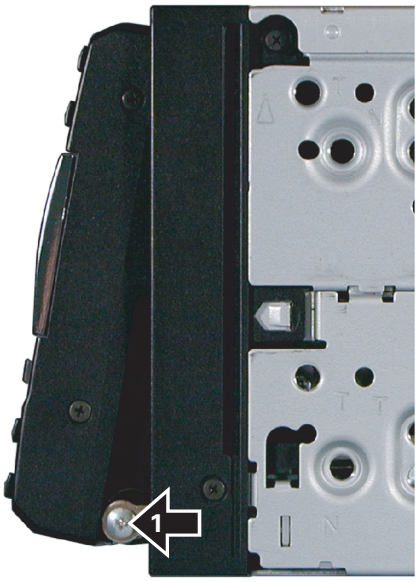

Fig.2

(2) Remove the screw to remove the Cover.
Do not pull the connecting flexible cable. (Fig.3)

(3) Remove the flexible cable from the connector to remove the Monitor Assy. Push the lid of the connector up with the top of precision screwdriver (minus), and then remove the flexible cable. Take much care not to pull the connector forcedly or break it open because it is easy to be damaged. And also, use the precision screwdriver in the same way in the installation. (Fig.3)

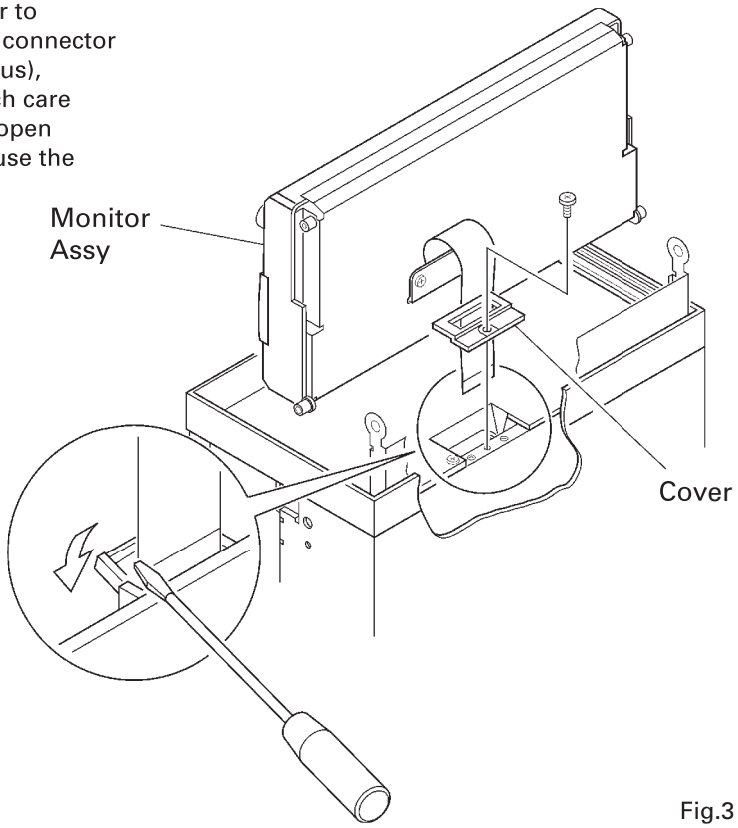

Fig.3

● Removing the Case Unit (Fig.4)

1 Remove the two screws and then remove the Guide.

2 Remove the four screws.

3 Remove the five screws and then remove the Case Unit.

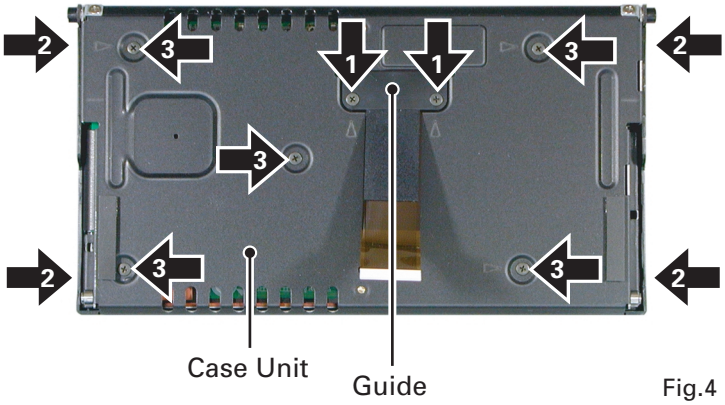

Fig.4

● Removing the Monitor PCB (Fig.5)

1 Remove the five screws.

Disconnect the connector and then remove the Monitor PCB.

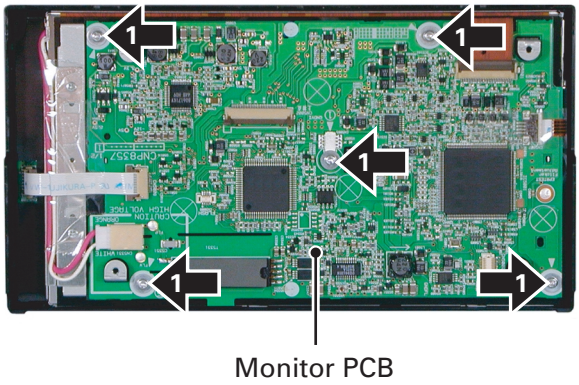

Fig.5

● Removing the CD Mechanism Module (Fig.6)

1 Remove the four screws.

Disconnect the connector and then remove the CD Mechanism Module.

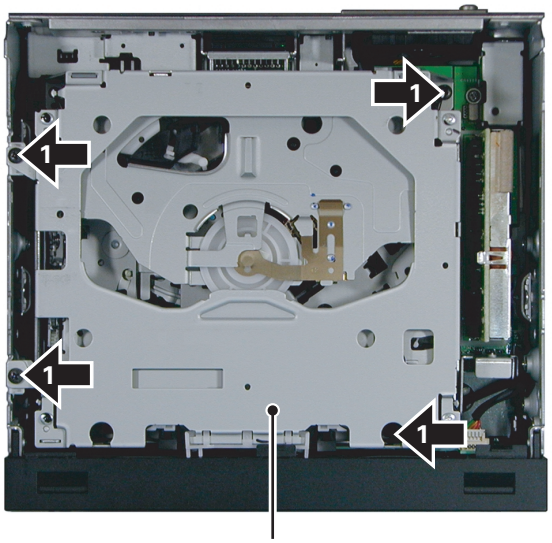

Fig.6

● Removing the Panel Unit (Fig.7)

1 Remove the two screws.

2 Remove the four screws.

Disconnect the connector and then remove the Panel Unit.

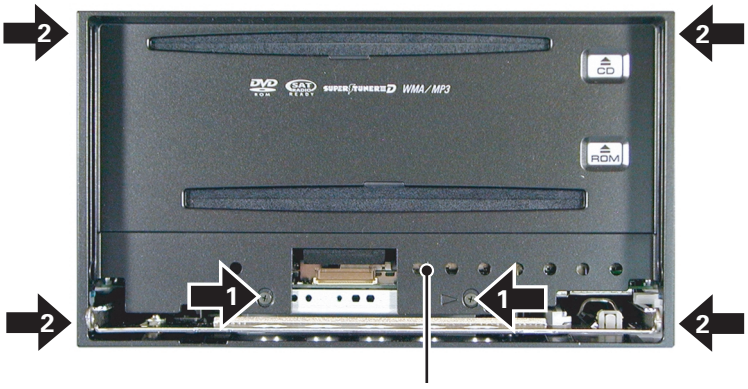

Panel Unit

Fig.7

● Removing the Heat Sink (Fig.8)

1 Remove the two screws.

2 Remove the seven screws and then remove the Heat Sink.

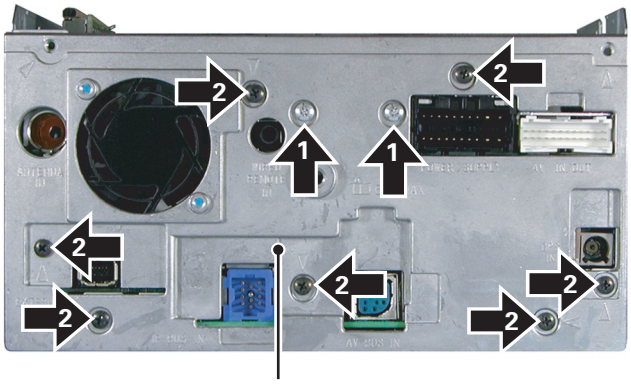

Heat Sink

Fig.8

● Removing the System Unit (Fig.9)

1 Remove the six screws.

Disconnect the connector and then remove the System Unit.

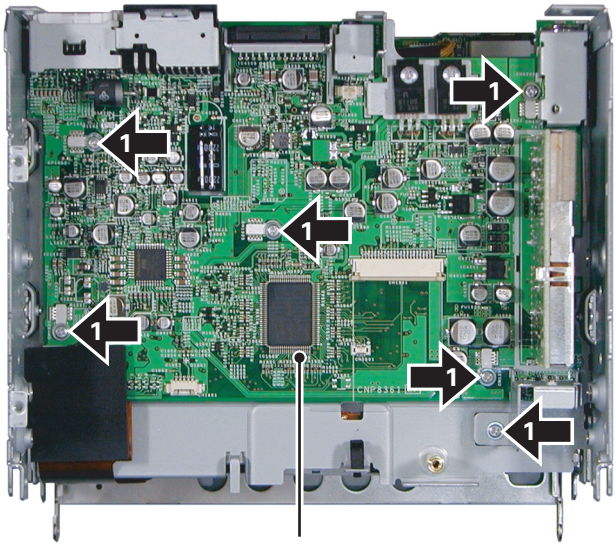

System Unit

Fig.9

● Removing the Chassis Unit (Fig.10)

1 Remove the three screws and then remove the Chassis Unit.

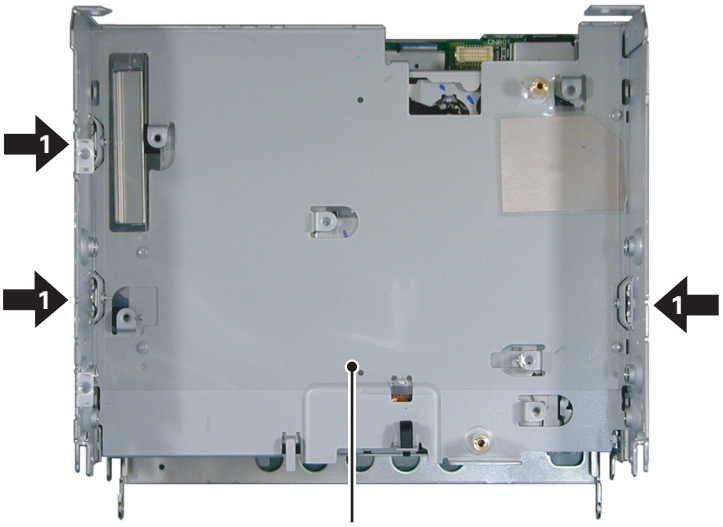

Fig.10

● Removing the DVD Mechanism Module (Fig.11)

1 Remove the four screws and then remove the DVD Mechanism Module.

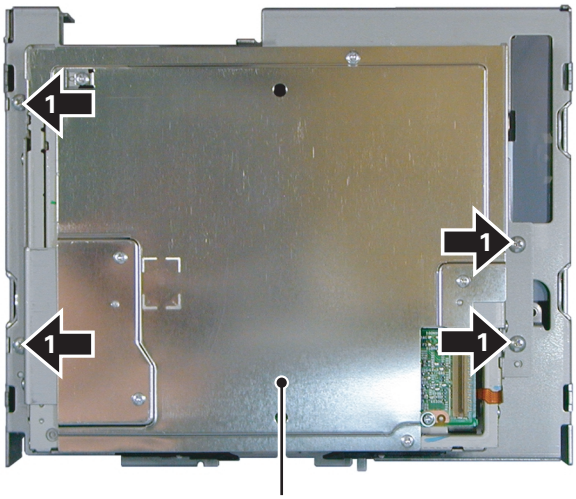

Fig.11

● Removing the CC Unit (Fig.12)

1 Straighten the tab at location indicated.

2 Remove the four screws.

Disconnect the connector and then remove the CC Unit.

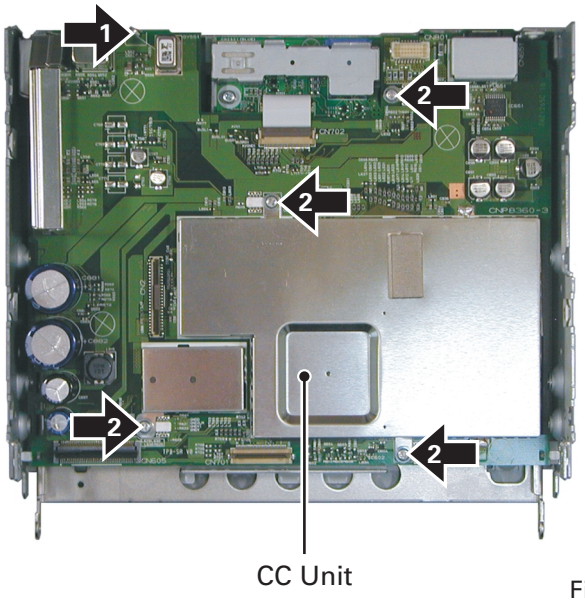

Fig.12

● Removing the Connector Unit (Fig.13)

1 Remove the two screws.

Disconnect the connector and then remove the Connector Unit.

● Removing the Main PCB Unit (Fig.13)

2 Straighten the two tabs at locations indicated.

3 Remove the screw.

Disconnect the connector and then remove the Main PCB Unit.

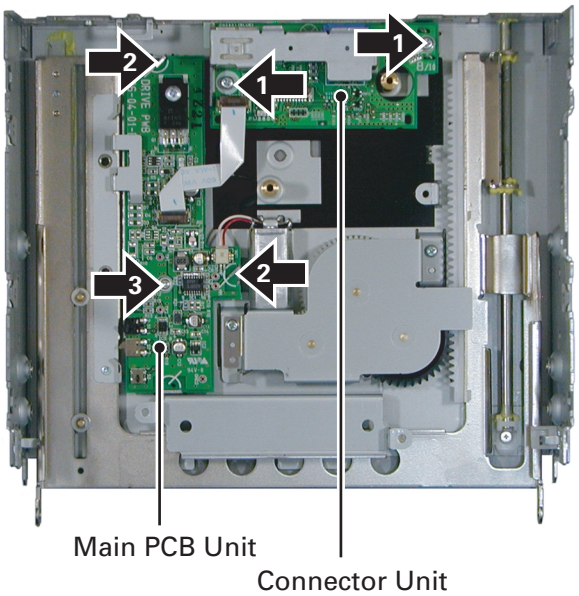

Fig.13

● Precautions on handling the mechanism module

1. Hold the upper and main frames.
2. Do not hold the front portion of the upper frame. It is a delicate part.
3. Do not touch the switches on the top panel.
4. Be careful not to catch the flexible cables.

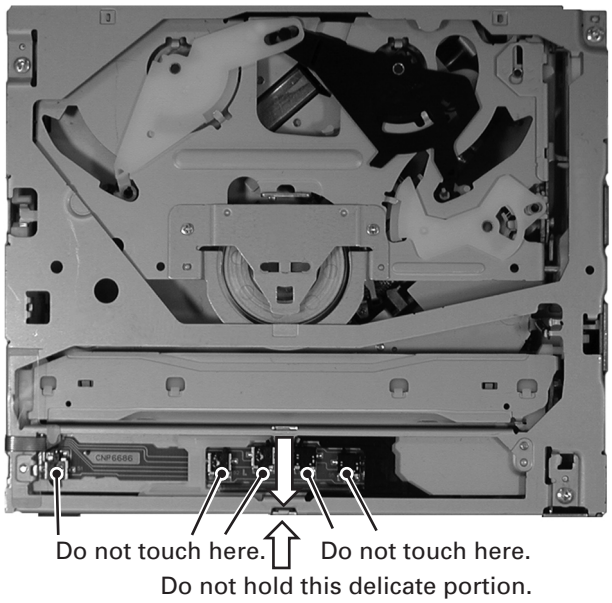

● Removing the module pc board

1. Set the mechanism to the lock position (disc load standby position).
2. Place the mechanism module upside down.
3. Short the two lands on the pickup flexible cable as shown below.
4. Be sure to disconnect the pickup flexible cable and the CRG flexible cable from the connectors to protect them from damages.
5. Remove solder from the load motor leads and clamp SW leads.
6. Loosen the two fixing screws. Lift the position A of the module pc board lightly and move it in the direction B to remove it. Be careful not to damage the flexible cable C.
7. Disconnect the 8/12 detection flexible-cable from the connector.

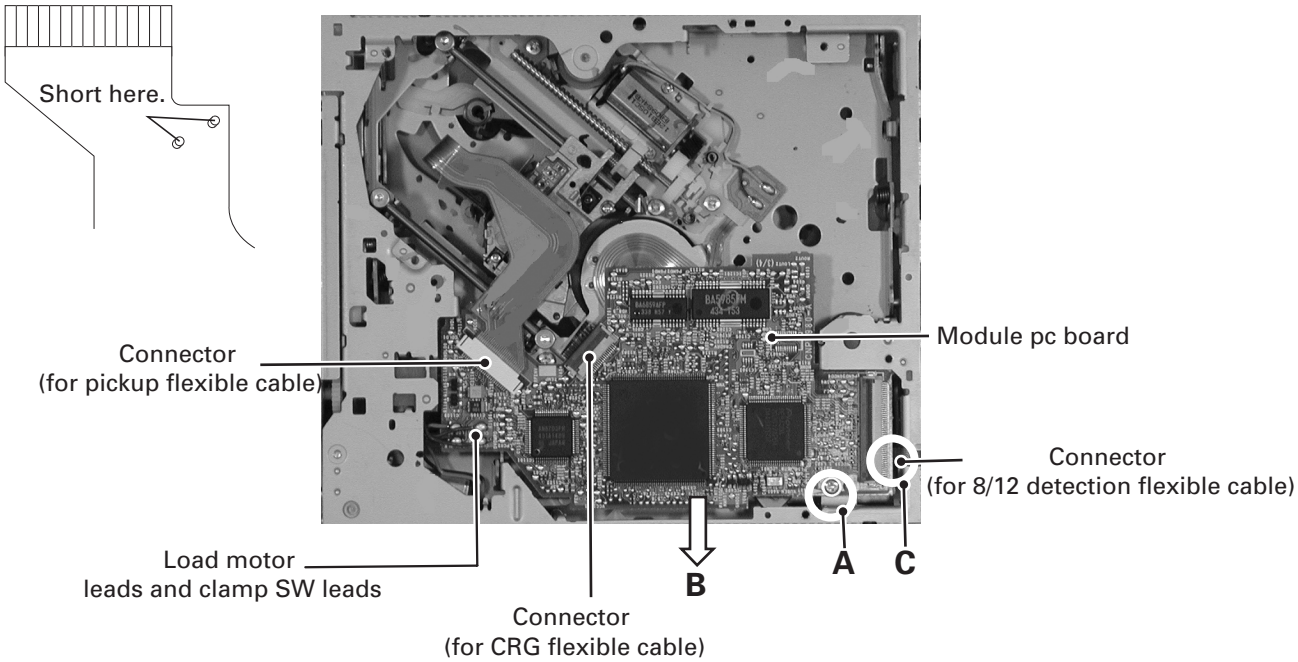

● Removing the pickup unit

1. Remove the module pc board in accordance with the procedure of "Removing the module pc board."
2. While holding the pickup case, remove the skew screw (main).
3. Lifting the end of the pickup rack, slide the main shaft, and remove the pickup unit.

Notes:

Replacing the pickup unit requires the skew adjustment.
Remove glue from both ends of the main and sub shafts, and skew stud.
Do not reuse the old skew screw. Be sure to use a brand-new skew screw supplied with a new pickup unit.
Fix the skew screw with glue (GYL1001) after adjustment.

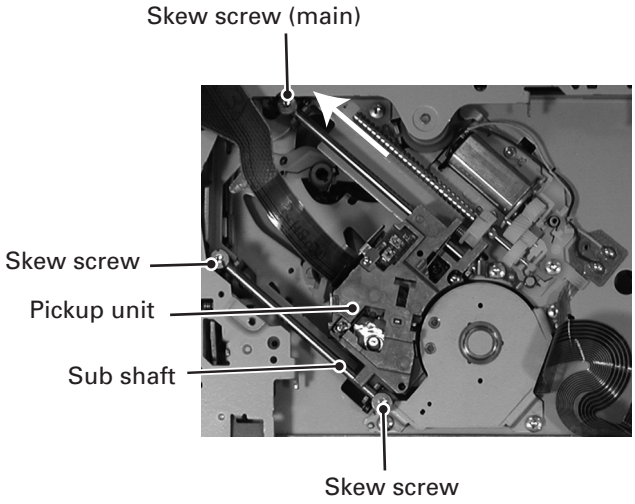

● How to hold the Mechanism Unit

1. Hold the top and bottom frame.
2. Do not squeeze top frame's front portion too tight, because it is fragile.

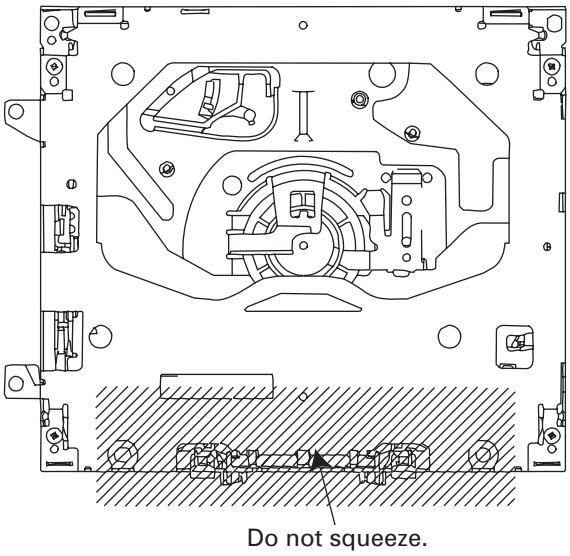

● Removing the Upper and Lower Frames

1. With a disc clamped, remove the four springs (A), the two springs (B), the two springs (C), and the four screws.
2. To remove the upper frame, open it on the fulcrum A.
3. While lifting the carriage mechanism, remove the three dampers.
4. With the frames removed, insert the connectors coming from the main unit and eject the disc.

Caution: Before installing the carriage mechanism in the frames, be sure to apply some alcohol to the dampers and set the mechanism to the clamp mode.

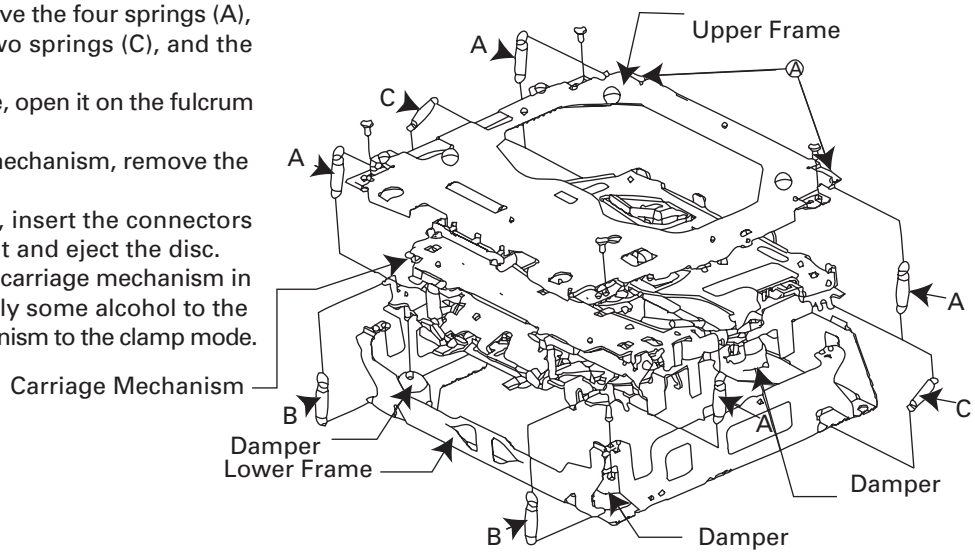

● Removing the Pickup Unit

1. Apply shorting solder to the Pickup flexible cable. Disconnect the cable.
2. Set the mechanism to the clamp mode.
3. Remove the lead wires from the inner holder.
4. Remove the washer, styling holder, change arm, and pickup lock arm.
5. While releasing from the hook of the inner holder, lift the end of the feed screw.

Caution: In assembling, move the planet gear to the load/eject position before setting the feed screw in the inner holder.

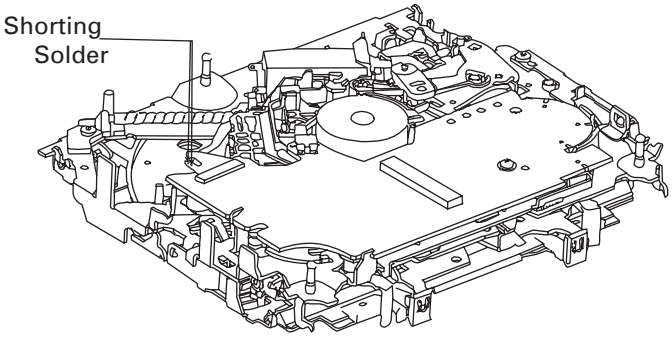

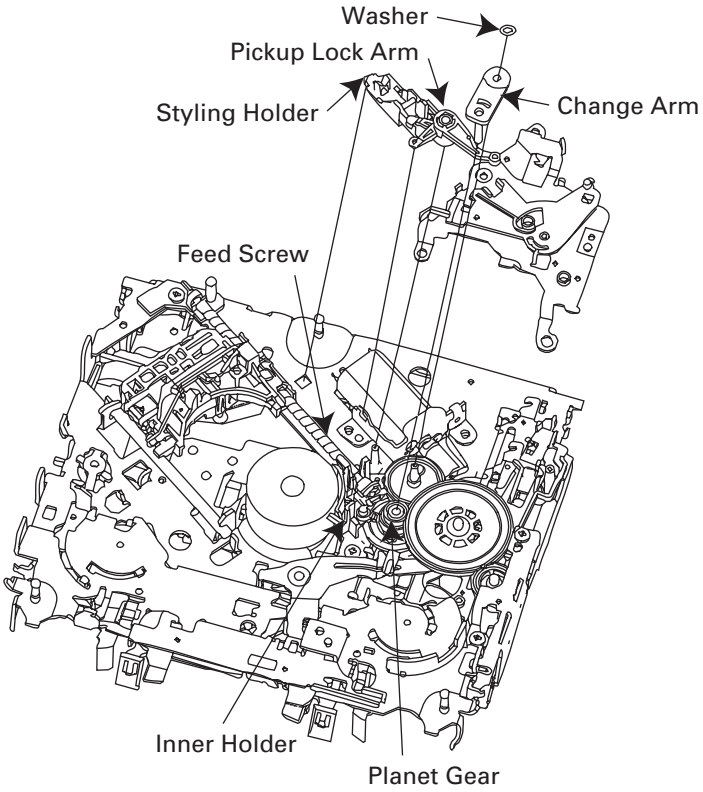

7.1.2 PCB LOCATIONS

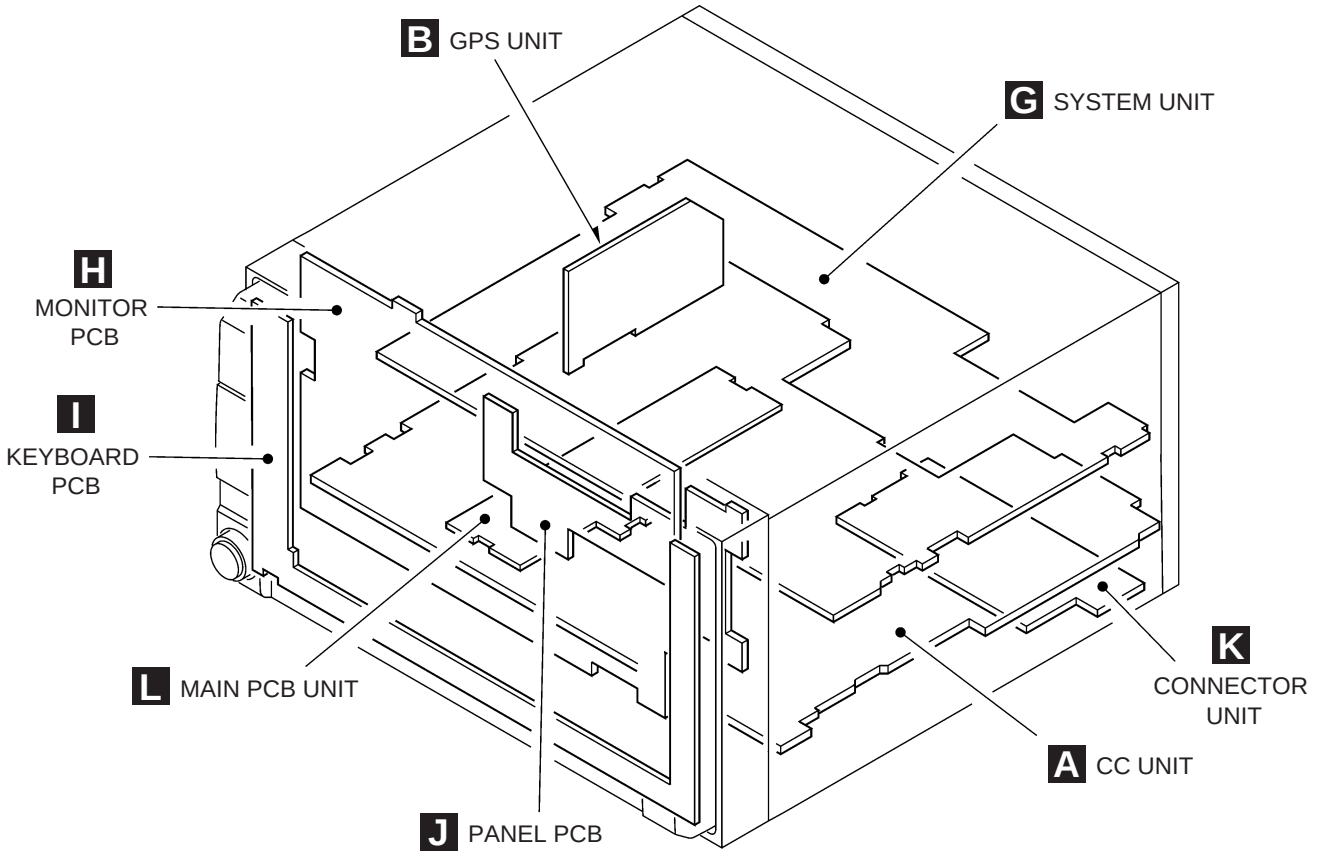

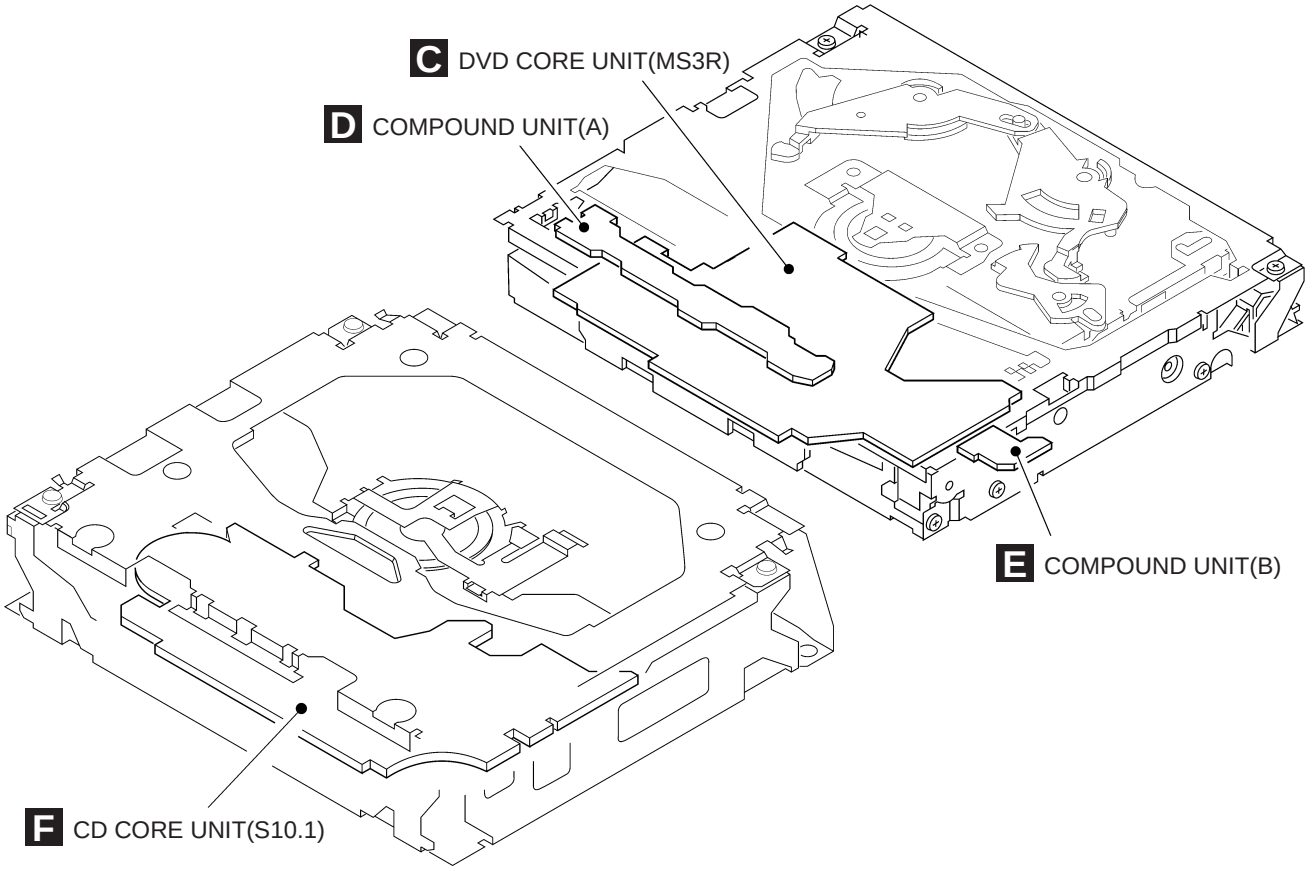

7.1.3 CONNECTOR FUNCTION DESCRIPTION

POWER SUPPLY

1	3	5	7	9	11	13	15	17	19
2	4	6	8	10	12	14	16	18	20

1. RR+
2. FR+
3. RR-
4. FR-
5. RL+
6. FL+
7. RL-
8. FL-
9. SPEED PULSE
10. SYSTEM REMOTE
11. PARKING BRAKE
12. A. ANT
13. ACC
14. REVERSE SIGNAL
15. ILM
16. MUTE
17. B. UP
18. GND
19. OPEN ONLY
20. GND

AV

1	3	5	7	9	11	13	15	17	19	21	23
2	4	6	8	10	12	14	16	18	20	22	24

1. REAR MONI GND
2. REAR MONI OUTPUT
3. NC
4. NC
5. BACK CAMERA GND
6. BACK CAMERA INPUT
7. VIDEO GND
8. VIDEO INPUT
9. AUDIO INPUT Lch GND
10. AUDIO INPUT Lch
11. AUDIO INPUT Rch GND
12. AUDIO INPUT Rch
13. GNDA
14. SUBWOOFER OUT Lch
15. GNDA
16. SUBWOOFER OUT Rch
17. GNDA
18. REAR OUTPUT Lch
19. GNDA
20. REAR OUTPUT Rch
21. GNDA
22. FRONT OUTPUT Lch
23. GNDA
24. FRONT OUTPUT Rch

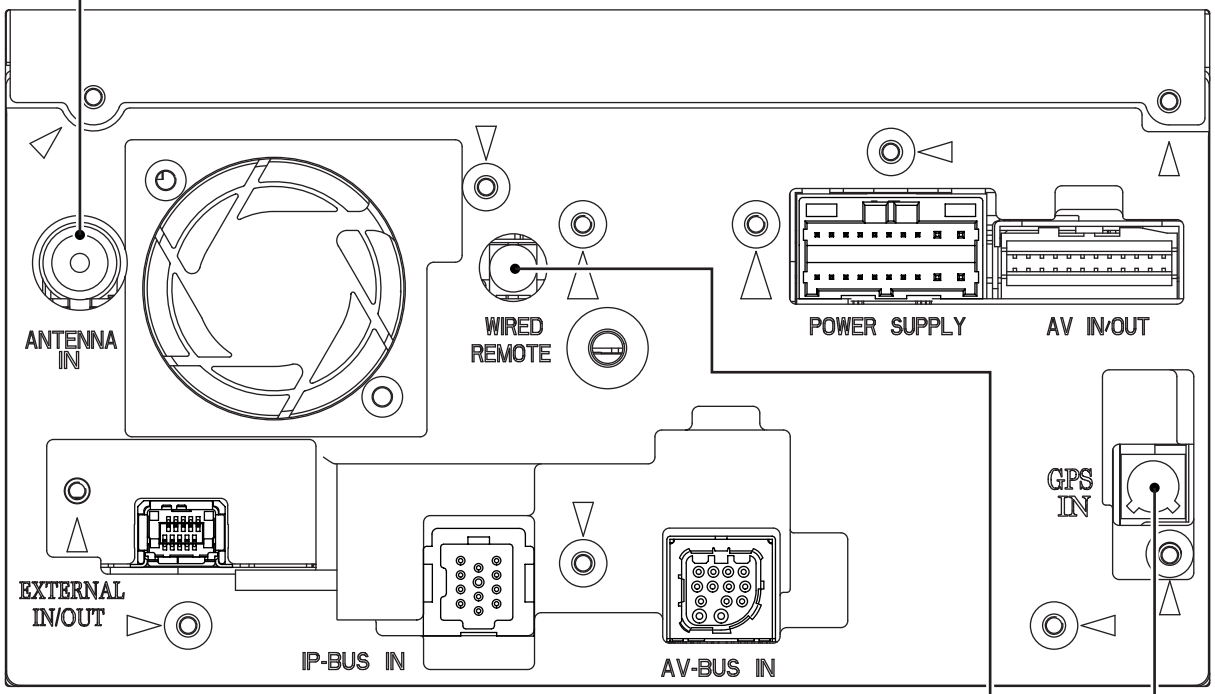

EXTERNAL

2	4	6	8	10
1	3	5	7	9

1. NC
2. NC
3. GNDD
4. CTOEX
5. EXTOC
6. HYOKA
7. CTOTA
8. TATOC
9. VTA
10. GND

IP-BUS

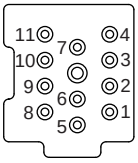

1. BUS+
2. IPGND
3. IPGND
4. MUTE
5. BUS-
6. IPGND
7. Lch
8. ASEN
9. Rch
10. GND
11. GND

AV-BUS

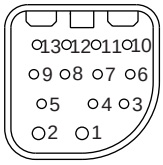

1. VIDEO GND
2. COMP VIDEO
3. NC
4. IP-SEL1
5. IP-SEL2
6. LED-V
7. GND
8. BEEP MUTE
9. BEEP-
10. REMOUT
11. NEW AV SENS
12. AV ON
13. BEEP+

GPS ANTENNA

WIRED REMOTE CONTROL

7.2 IC

K4S561632E-TL75
HY57V561620CLT-H
UPD705103GM-180S1
TC74LCX08FTS1
TC7SH04FUS1
PD6336C
PEH007A
PEH008A
TC74LCX245FTS1
TC74LCX541FTS1
TC7SH00FUS1
TC7SH08FUS1
UPD4721GSS1
AK4351VT
MB86291APFVS-G-DL
TC7SH14FUS1
BH7236AF
UPB1027GS
PD3390A
ADC12H034CIMSAS1
PD6519A
PE5479A
OZ961ISN
S-29221BR0I-J8T1
TPS850
BD6171KV
PE5478A
TC74VHCT08AFTS1
NJM2561F1
TA2050FS1
BA5835FP
NJM2885DL1-33
PE5454B
UPD63763GJ
PE5430A

* K4S561632E-TL75

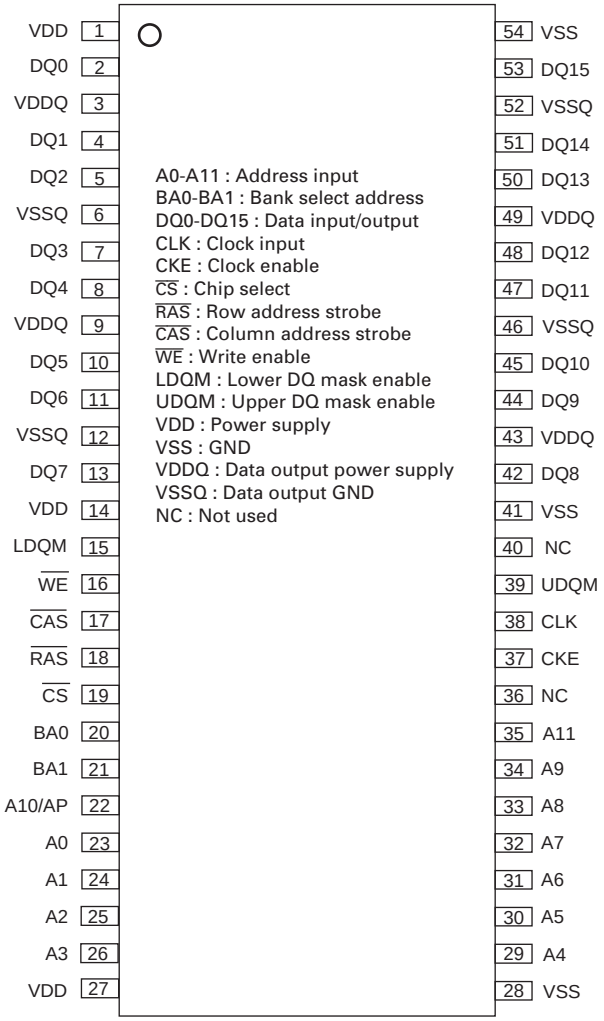

* HY57V561620CLT-H

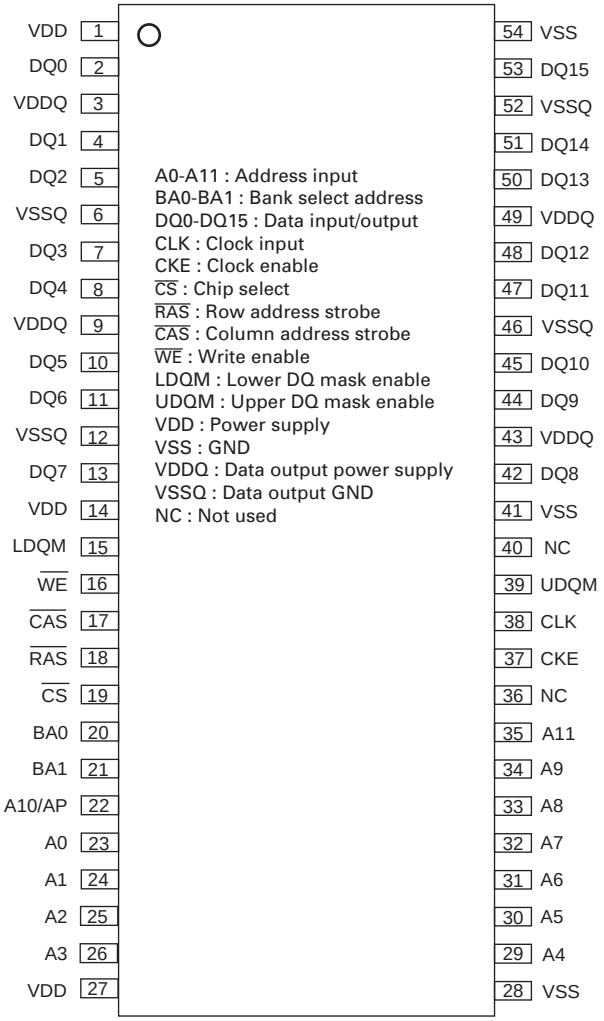

IC's marked by * are MOS type.
Be careful in handling them because they are
very liable to be damaged by electrostatic induction.

* UPD705103GM-180S1

* TC74LCX08FTS1

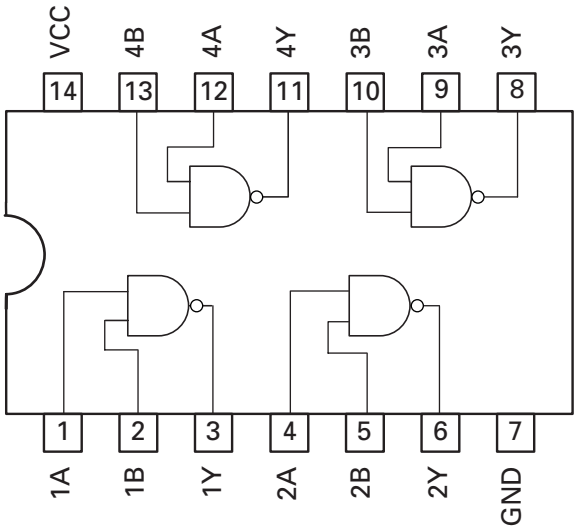

* TC7SH04FUS1

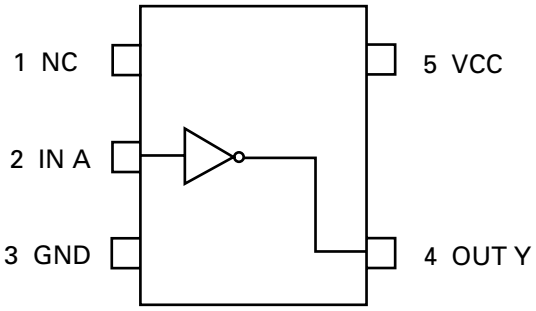

* PD6336C

● Pin Arrangement Chart

1	84	83	82	81	80	79	78	77	76	75	74	73	72	71	70	69	68	67	66	65	64
2	85	160	159	158	157	156	155	154	153	152	151	150	149	148	147	146	145	144	143	142	63
3	86	161	228	227	226	225	224	223	222	221	220	219	218	217	216	215	214	213	212	141	62
4	87	162	229	288	287	286	285	284	283	282	281	280	279	278	277	276	275	274	211	140	61
5	88	163	230															273	210	139	60
6	89	164	231															272	209	138	59
7	90	165	232															271	208	137	58
8	91	166	233															270	207	136	57
9	92	167	234															269	206	135	56
10	93	168	235															268	205	134	55
11	94	169	236															267	204	133	54
12	95	170	237															266	203	132	53
13	96	171	238															265	202	131	52
14	97	172	239															264	201	130	51
15	98	173	240															263	200	129	50
16	99	174	241															262	199	128	49
17	100	175	242															261	198	127	48
18	101	176	243															260	197	126	47
19	102	177	244	245	246	247	248	249	250	251	252	253	254	255	256	257	258	259	196	125	46
20	103	178	179	180	181	182	183	184	185	186	187	188	189	190	191	192	193	194	195	124	45
21	104	105	106	107	108	109	110	111	112	113	114	115	116	117	118	119	120	121	122	123	44
22	23	24	25	26	27	28	29	30	31	32	33	34	35	36	37	38	39	40	41	42	43

TOP VEIW

VSS	PIO27	DSP_BCLKI	PIO25	PIO24	PIO22	OVDD3	DSP_BDI	DSP_BFSI	DSP_XHINT	DSP_HRDY	OVSS6	DSP_BFSO	DSP_BCLKO	XCS_SRAMH	OVDD2	DSP_XRS	DSP_ATTCNT	D31	CD_MCLK	ADC_GCNT2	VSS
PIO29	PIO28	PIO26	D4	D6	OVSS7	D10	XCS_DSP	D14	PIO23	D18	D20	DSP_BDO	D24	PIO_OUT	OVSS5	TEST1	CD_LRCLK	CD_BLK	ADC_GCNT0	ADC_GCNT1	ADC_DATA
USBXPWREN	XCS_FLASH	D2	D3	D5	D8	D9	D12	D13	D16	D17	D19	D22	D23	D26	D27	D29	D30	A2	A3	ADC_BCLK	ADC_LRCLK
USBXOVRCUR	D0	D1	VSS	VDD	D7	VDD	D11	VSS	D15	VDD	VDD	D21	VSS	D25	VDD	D28	VSS	VSS	A4	ADC_MCLK	TEST4
UVD1M	XMRD	XMWR	VSS															VDD	A5	A6	EXTAL1
UVD1P	USBPWREN	XLLBEN	XLUBEN															VPDP	A7	A8	OVSS4
UVD2M	XIOWR	XIORD	VDD															VDD	A9	A10	XTAL1
UVD2P	NC	NC	NC															A11	A12	TEST2	TEST3
USBOVRCUR	NC	NC	VSS															VSS	PC_READY	DAC_MCLK	DAC_LRCLK
USB_CLK	NC	NC	NC															PC_XVS2	PC_RESET	DAC_BCLK	DAC_DATA
XCS_SRAM	XREADY	XBCYST	VDD															VDD	PC_WXT	PC_XREG	PIO21
XWR_SRAM	SRAM_CSSEL	XCS2	VDD															VDD	PC_BVD2	PC_A0	OVSS3
PIO31	PIO30	XCS3	XCS5															PC_BVD1	PC_WP	PIO20	CD_DATA
IR_RX	XCS6	DREQ0	VSS															VSS	PC_XCD2	PIO19	PIO18
TEST0	XTST	DREQ1	DREQ2															PC_XCD1	PC_XCE1	PIO17	PIO16
XTAL0	SMCK	INT3	VDD															VDD	PC_XCE2	PIO15	PIO14
MST	XSM	INT2	INT1															PC_XOE	PC_XVS1	PIO13	PIO12
EXTAL0	GDC_WT	INT0	VDD															VSS	PC_XIORD	PIO11	PIO10
UART9_TXD	UART9_RXD	ATA_DA0	VSS	VSS	ATA_XDIOR	VDD	ATA_DD1	VSS	ATA_DD5	VDD	VDD	ATA_DD10	VSS	ATA_DD14	VDD	ATA_XCS0	VDD	VSS	PC_XIOWR	PIO9	PIO8
UART8_TXD	UART8_RXD	ATA_DA1	ATA_INT	ATA_XDMACK	ATA_IORDY	ATA_DMARQ	ATA_DD0	ATA_DD3	ATA_DD4	ATA_DD7	ATA_DD8	ATA_DD9	ATA_DD12	ATA_DD13	ATA_DA2	ATA_XCS1	PC_XPWR	PC_XUBUF	PC_XWE	PIO7	PIO6
UART7_TXD	UART7_RXD	UART6_RXD	OVSS0	UART4_RXD	XRESET	ATA_XDIOW	UART3_RXD	ATA_DD2	UART1_RXD	ATA_DD6	ATA_XRESET	UART_XDCD	ATA_DD11	UART_XRI	ATA_DD15	UART1_XDTR	ATA_DIR	PC_XLBUF	PIO2	PIO5	PIO4
VSS	UART6_TXD	UART5_RXD	UART5_TXD	UART4_TXD	UART3_TXD	OVDD0	UART2_TXD	UART2_RXD	UART1_TXD	A23	CPU_CLK	OVSS1	UART1_XCTS	UART_XDSR	OVDD1	UART1_XRTS	PIO0	PIO1	OVSS2	PIO3	VSS

TOP VEIW

● Block Diagram Chart

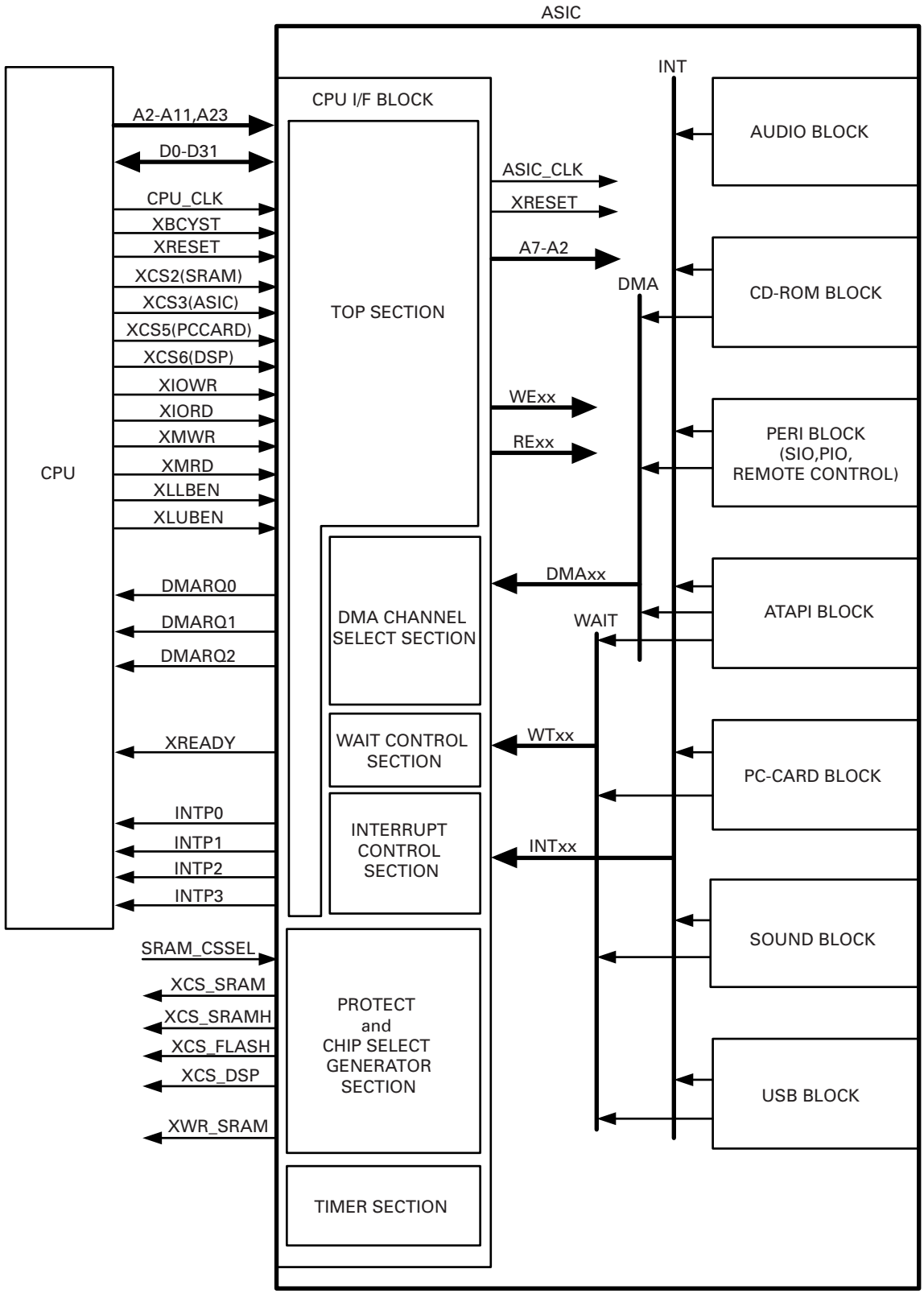

* PEH007A

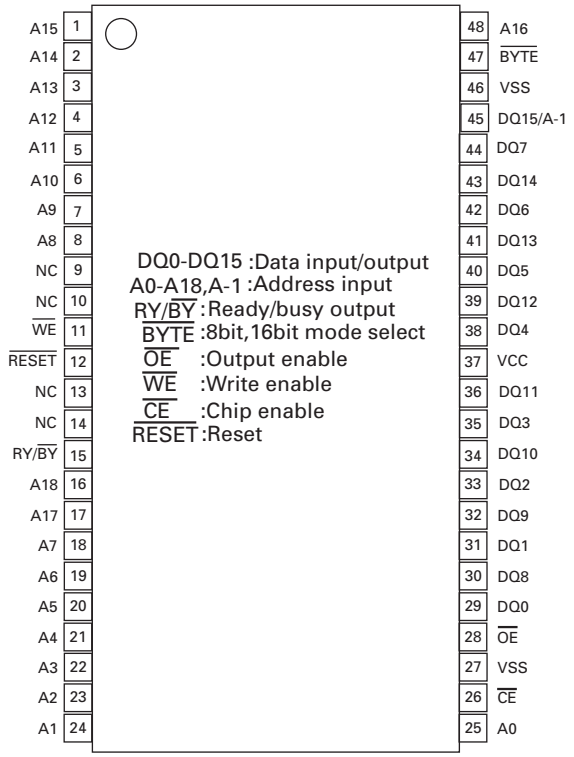

* PEH008A

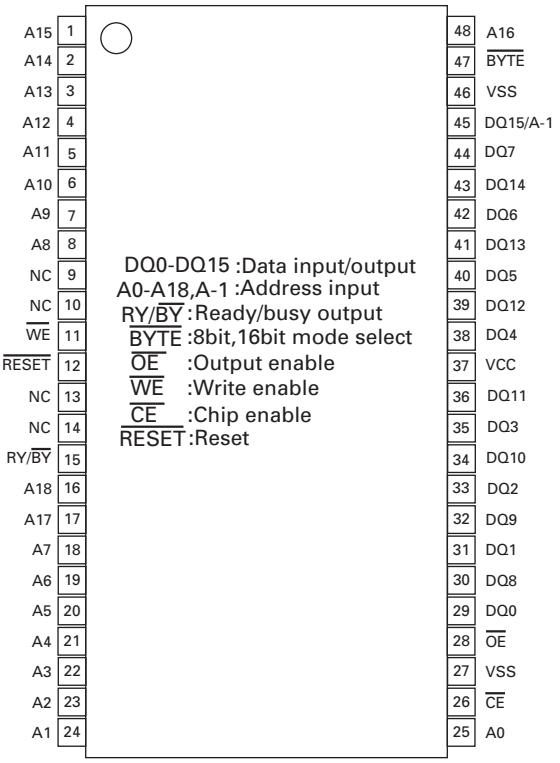

* TC74LCX245FTS1

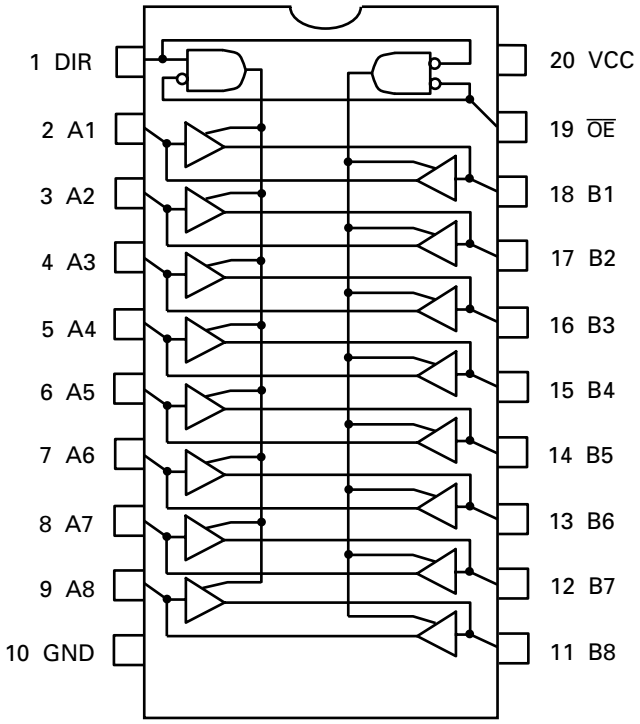

* TC74LCX541FTS1

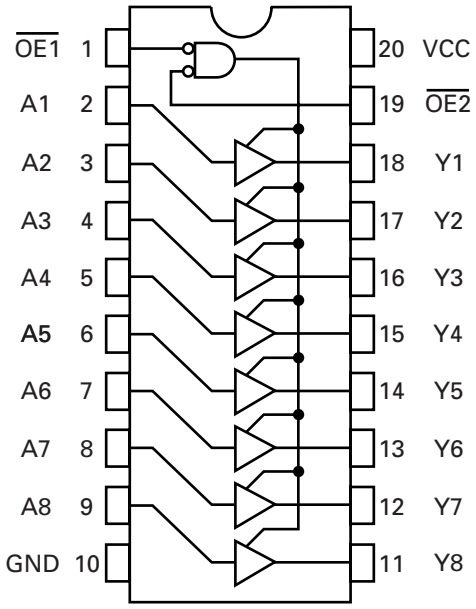

* TC7SH00FUS1

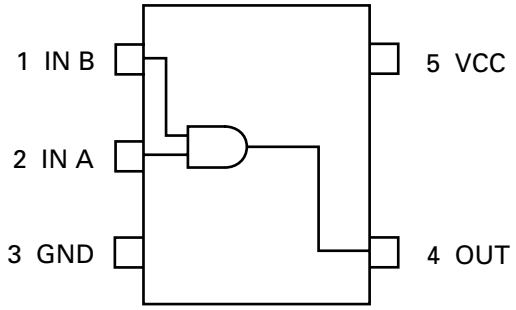

* TC7SH08FUS1

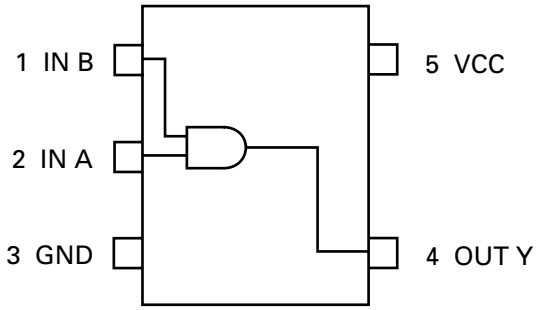

UPD4721GSS1

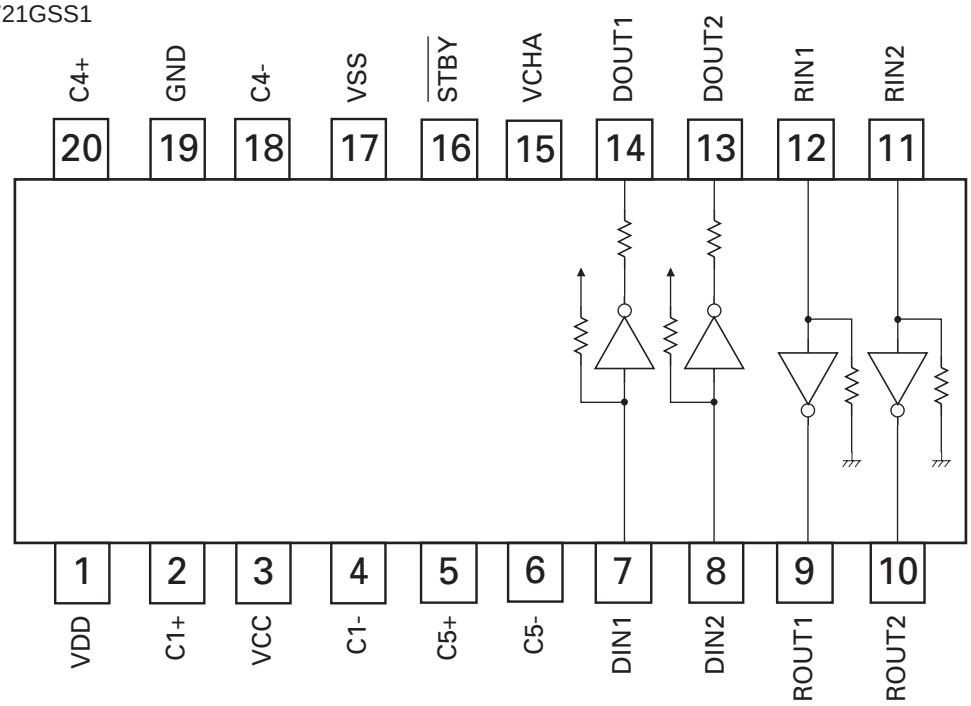

AK4351VT

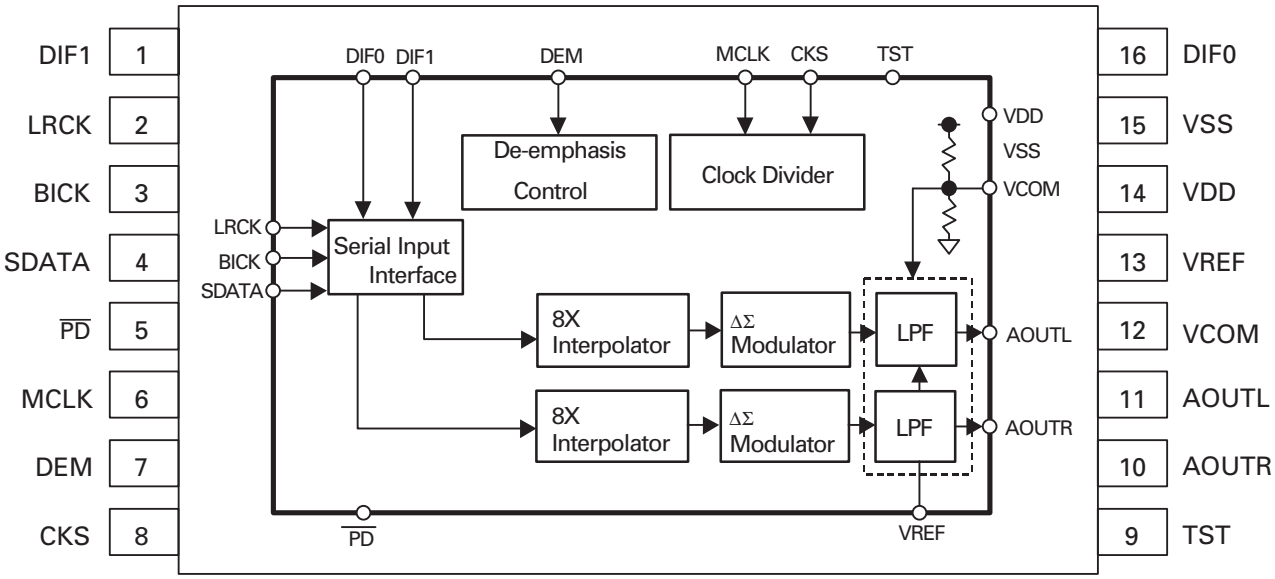

* MB86291APFVS-G-DL

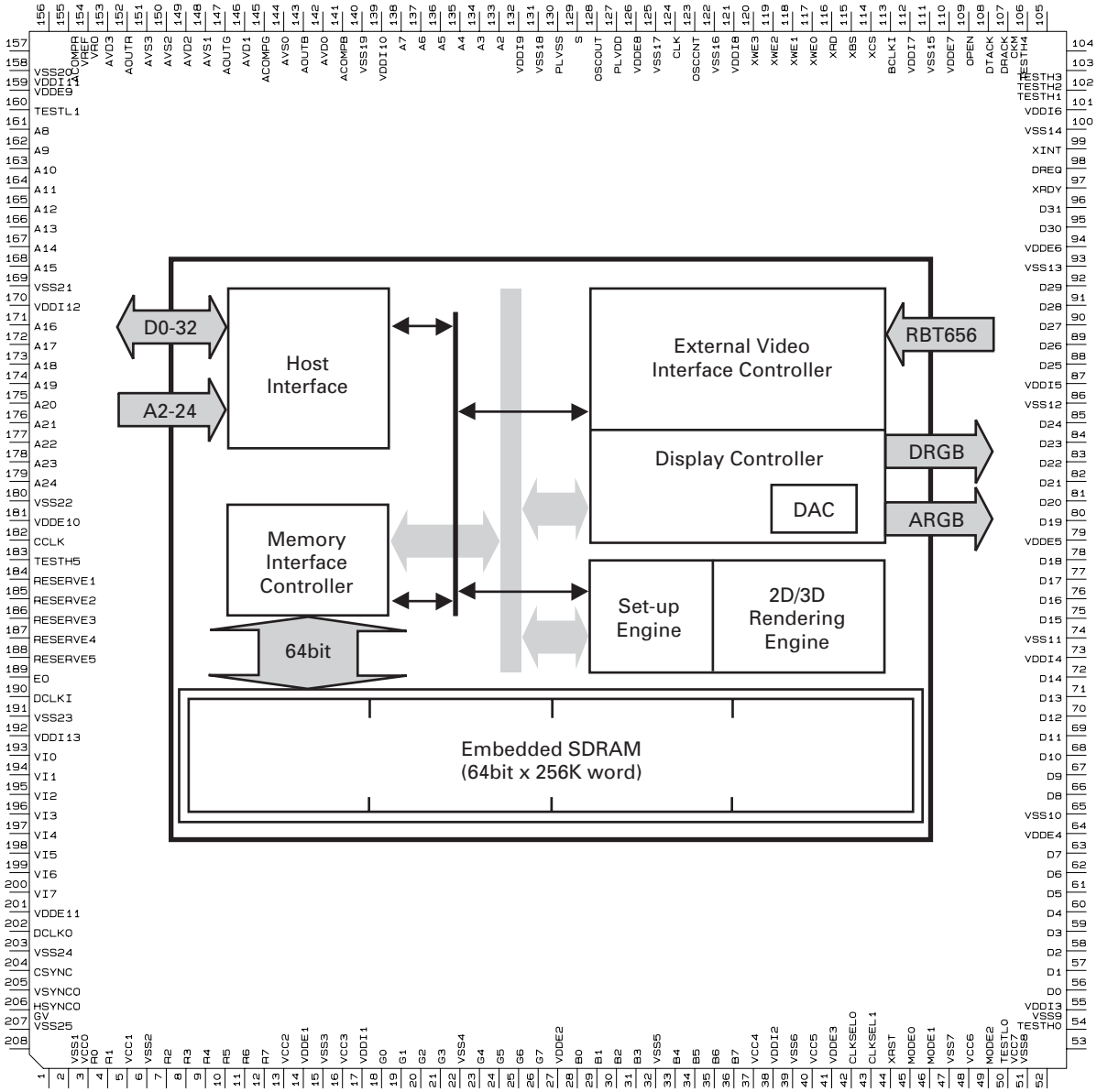

* TC7SH14FUS1

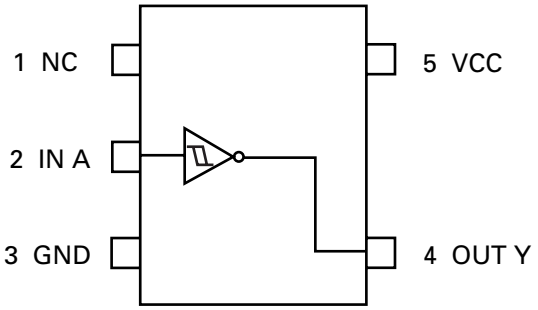

BH7236AF

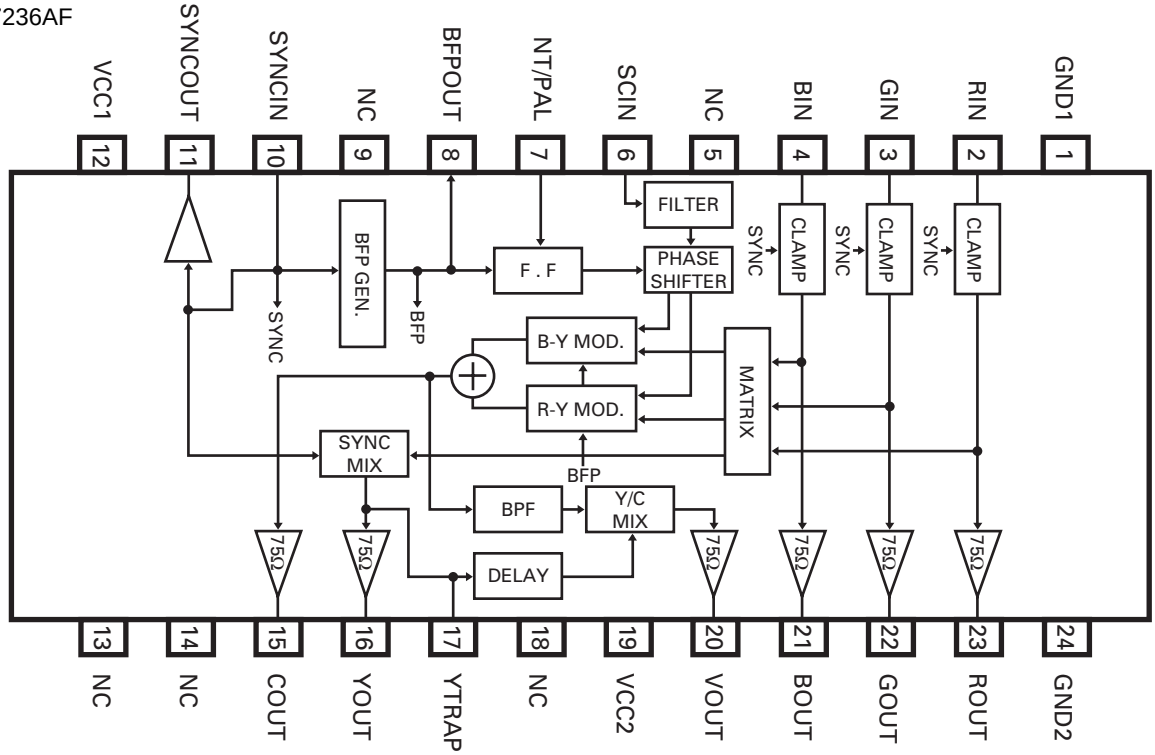

UPB1027GS

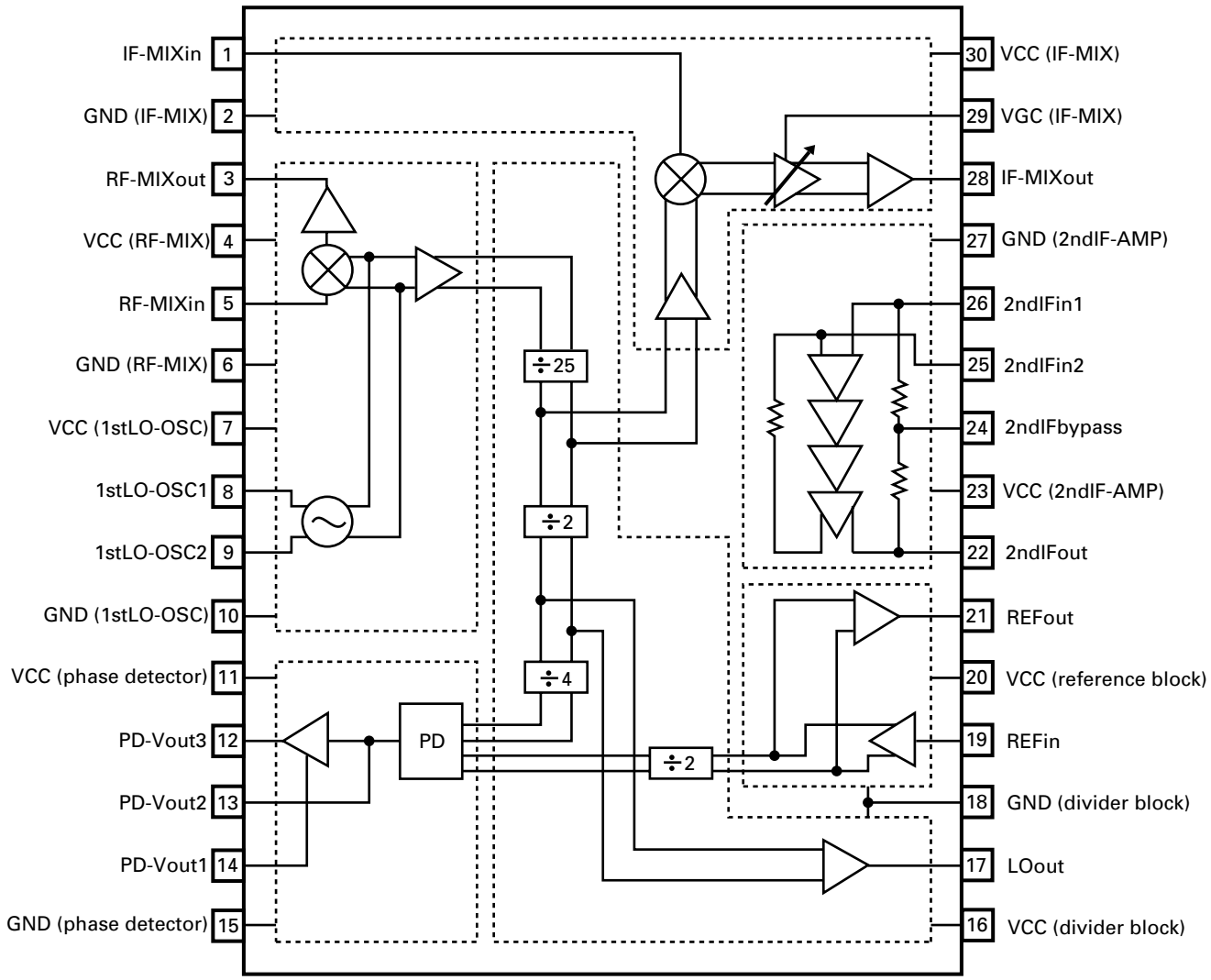

●Pin Functions(PD3390A)

Pin No.	Pin Name	I/O	Format	Function and Operation
1	VCC0			Power supply (3.3V)
2	VSS0			GND
3	TXD2	I/O		SIO2 Transmission data input / output
4	RXD2	I/O		SIO2 Reception data input / output
5	TXD1	O	C	SIO1 Transmission data output
6	RXD1	I		SIO1 Reception data input
7	TXD0	O	C	SIO0 Transmission data output
8	RXD0	I		SIO0 Reception data input
9	SPEED	I		SP I/F input
10	ADCSB	O	C	AD I/F output
11	ADSCK	O	C	AD I/F output
12	ADTXD	O	C	AD I/F output
13	ADRXD	I		AD I/F input
14	ADSRX	I		AD I/F input
15	ADIO0	I/O		AD I/F input / output
16	ADIO1	I/O		AD I/F input / output
17	ADIO2	I/O		AD I/F input / output
18	VCC1			Power supply (3.3V)
19	VSS1			GND
20	PWM	O		PWM signal output
21	PLINT	I		PLL I/F input
22	PLCE	O	C	PLL I/F output
23	PLSCK	O	C	PLL I/F output
24	PLTX	O	C	PLL I/F output
25	PLRX	I		PLL I/F input
26	PLIO0	I/O		PLL I/F input / output
27	PLIO1	I/O		PLL I/F input / output
28	PLIO2	I/O		PLL I/F input / output
29	DDINT	I		Darc I/F input
30	DDCE	O	C	Darc I/F output
31	DDSCK	O	C	Darc I/F output
32	DDTX	O	C	Darc I/F output
33	DDRX	I		Darc I/F input
34	DDIO0	I/O		Darc I/F input / output
35	DDIO1	I/O		Darc I/F input / output
36	DDIO2	I/O		Darc I/F input / output
37	TIOA0	I/O		Parallel input / output
38	TIOA1	I/O		Parallel input / output
39	TIOB0	I/O		Parallel input / output
40	TIOB1	I/O		Parallel input / output
41	VCC2			Power supply (3.3V)
42	VSS2			GND
43-53	A19-9	I/O		Address bus input / output
54	VCC3			Power supply (3.3V)
55	VSS3			GND
56-64	A8-0	I/O		Address bus input / output
65	VCC4			Power supply (3.3V)
66	VSS4			GND
67-82	D0-15	I/O		Address bus input / output
83	VCC5			Power supply (3.3V)
84	VSS5			GND
85	WRHB	I/O		Upper data write strobe input / output
86	WRLB	I/O		Lower data write strobe input / output
87	RDB	I/O		Read data strobe input / output
88	CS2B	I/O		Chip select aria 1 for external storage input / output
89	CS0B	I/O		Chip select aria 0 for ROM input / output
90	VCC6			Power supply (3.3V)

Pin No.	Pin Name	I/O	Format	Function and Operation
91	VSS6			GND
92	TEST2			Test mode
93	CKOEB	I		CK output enable input
94	CK	O	C	CPU clock output
95	CS5B	O	C	DRAM low address strobe output
96	CS3B	O	C	DRAM column address strobe output
97	CS1B	O	C	DRAM column address upper byte strobe output
98	RTCVSS1			Power supply (3.3V)
99	SRAMB	I		Backup memory select input
100	STANBYB	I		Stand by signal input
101	RTCVSS0			GND
102	XRTCIN	I		Sub crystal oscillator input (RTC)
103	XRTCOUT	O	C	Sub crystal oscillator output (RTC)
104	RTCVCC			Power supply (3.3V)
105	PCKSEL0	I		Processor clock select input
106	PCKSEL1	I		Processor clock select input
107	CCKSEL	I		CRCK signal select input
108	CCKDIR	I/O		Carrier clock direct input / inverter amp output
109	CCKVCC			Power supply (3.3V)
110	CRCK	I		Carrier clock input
111	CCKGND			GND
112-118	PC0-6	I/O		Parallel input / output
119	NMI			Connect to VCC
120	RESETB	I		System reset input
121	MSTRSTB	I		Test reset input
122	TEST0	I		Test mode input
123	TEST1	I		Test mode input
124	REFSEL	I		GPS reference clock select input
125	REFCK	I		Reference clock input
126	VCC7			Power supply (3.3V)
127	VSS7			GND
128	XAUXIN	I		Sub crystal oscillator output input (AUX)
129	XAUXOUT	O	C	Sub crystal oscillator output (AUX)
130-133	PIN0-3	I		Parallel input
134-137	PIO4-7	I/O		Parallel input / output
138	TXD3	I/O		SIO3 Transmission data input / output
139	RXD3	I/O		SIO3 Reception data input / output
140	BOWWOWB	O	C	Watch dog timer output
141	IFDIR	I/O		IF direct input / IF inverter amp output
142	IFVCC			Power supply (3.3V)
143	IF	I		IF input
144	IFGND	I		IF amp GND input

* PD3390A

Format	Meaning
C	CMOS

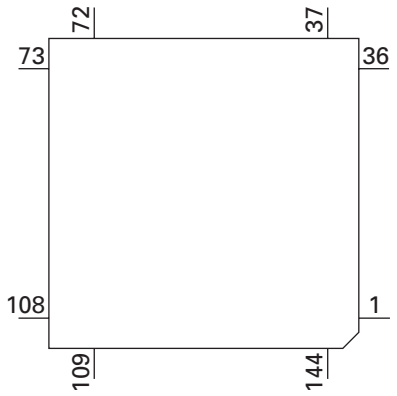

ADC12H034CIMSAS1

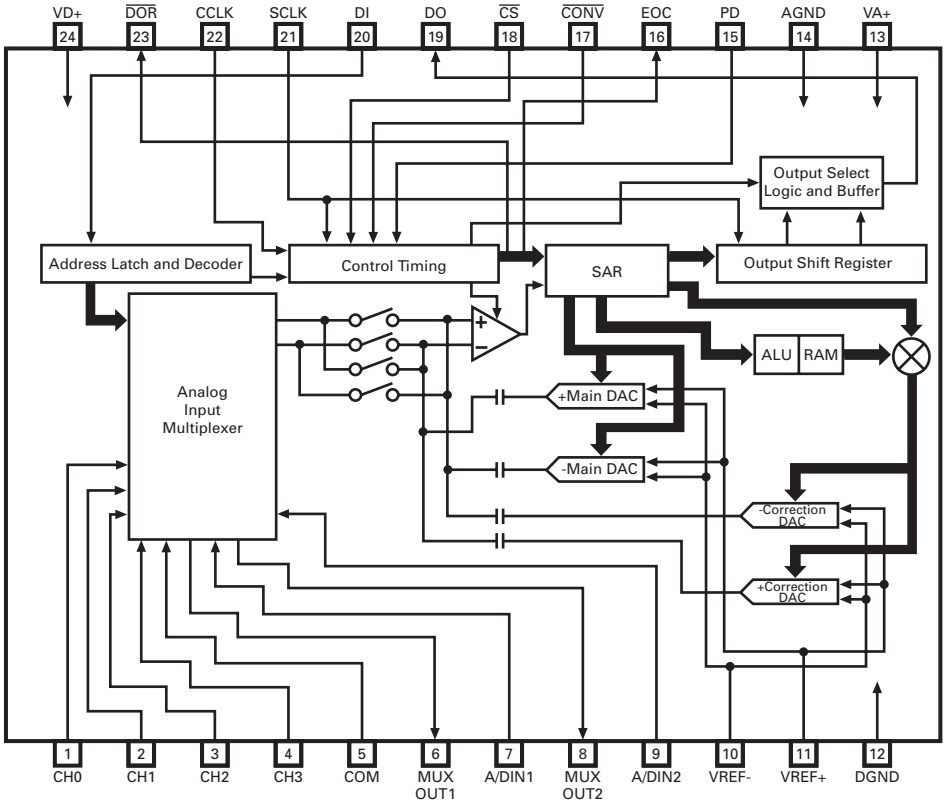

* PD6519A

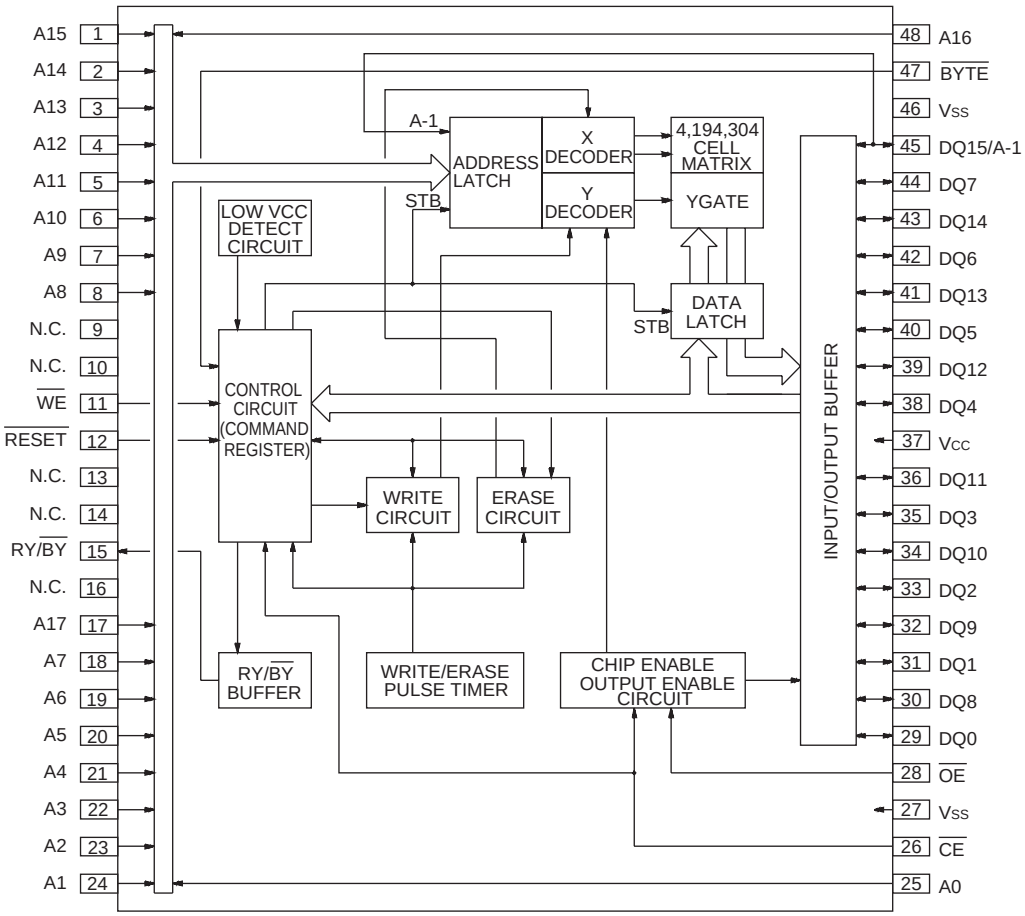

●Pin Functions(PE5479A)

Pin No.	Pin Name	I/O	Function and Operation
1	PNLADX	I	X directions analog input
2	LSEN	I	Lens sense input
3	PNLADY	I	Y directions analog input
4	AVSS		A/D converter GND
5	DIMMER	O	Dimmer anarog output
6	INVBST_DA	O	Back light boost signal output (low temperature)
7	AVREF1		D/A converter reference voltage
8	RXD	I	Data input from system microcomputer (UART)
9	TXD	O	Data output to system microcomputer (UART)
10	MFLPW	O	Back light control output
11	LKYDT	I	Data input from LCD micro computer (UART)
12	LDPDT	O	Data output to LCD micro computer (UART)
13	MVIPW	O	Picture power supply control output
14	OSDCS	O	OSD chip select output
15	NC		Not used
16	TSI	I	Test program data input
17	TSO	O	Test program data output
18	TSCK	I	Test program clock input
19	OVICHK	I	Back light power supply overcurrent detect input
20	EPRRST	I	EEPROM reset input
21	EPRTEST	I	EEPROM data setup mode input
22	STEST	I	Monitor operation mode input
23	STEST2	I	Touch panel test mode input
24	PNLXV	O	Hi output is carried out when X directions is detected
25	PNLYV	O	Hi output is carried out when Y directions is detected
26	NC		Not used
27	SDA	I/O	IC data input / output
28	SCL	O	IC clock output
29	PIPRES	O	IC reset output
30	LSWVDD	O	LCD micro computer power supply control output
31	PNLVD	O	Touch panel power supply control output
32	NC		Not used
33	VSS1		GND
34-37	NC		Not used
38	ROMDATA		Not used
39	ROMCLK		Not used
40	POMCS		Not used
41,42	NC		Not used
43	INVBST		Not used
44	INVPUL	O	Inverter pulse output
45	BEEP		Not used
46	EPRCS	O	EEPROM chip select output
47	EPRSK	O	EEPROM serial clock output
48	EPRDO	O	EEPROM serial data output
49	EPRDI	I	EEPROM serial data input
50	EPRPROT	O	EEPROM memory protect output
51	TESTIN	I	Chip test input
52	NC		Not used
53	LDIMMER		Not used
54	LBKL	O	LCD micro computer back light power supply control output
55,56	NC		Not used
57	LCDTYPE1	I	LCD panel type detect input1
58	NC		Not used
59	LCDTYPE2	I	LCD panel type detect input2
60	RESET	I	Reset input
61	REMIN	I	Remote control data input
62	VDDSENS	I	Power supply sense input
63	ROT0	I	Rotary encoder input0
64	ROT1	I	Rotary encoder input1
65	LCDLR		Not used
66	TVIND		Not used
67	VSS0		GND
68	VDD1		Power supply
69	X2		Crystal oscillator connection pin
70	X1		Crystal oscillator connection pin
71	VPP		Not used
72	XT2		Not used

Pin No.	Pin Name	I/O	Function and Operation
73	XT2		GND
74	VDD0		Power supply
75	AVDD		A/D converter power supply
76	KEY0	I	Analog key data input 0
77	KEY1	I	Analog key data input 1
78	KEY2	I	Analog key data input 2
79	KEY3	I	Analog key data input 3
80	TEMPSEN	I	Temperature sense input (back light boost)

* PE5479A

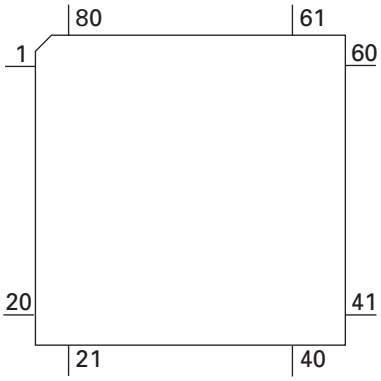

OZ961ISN

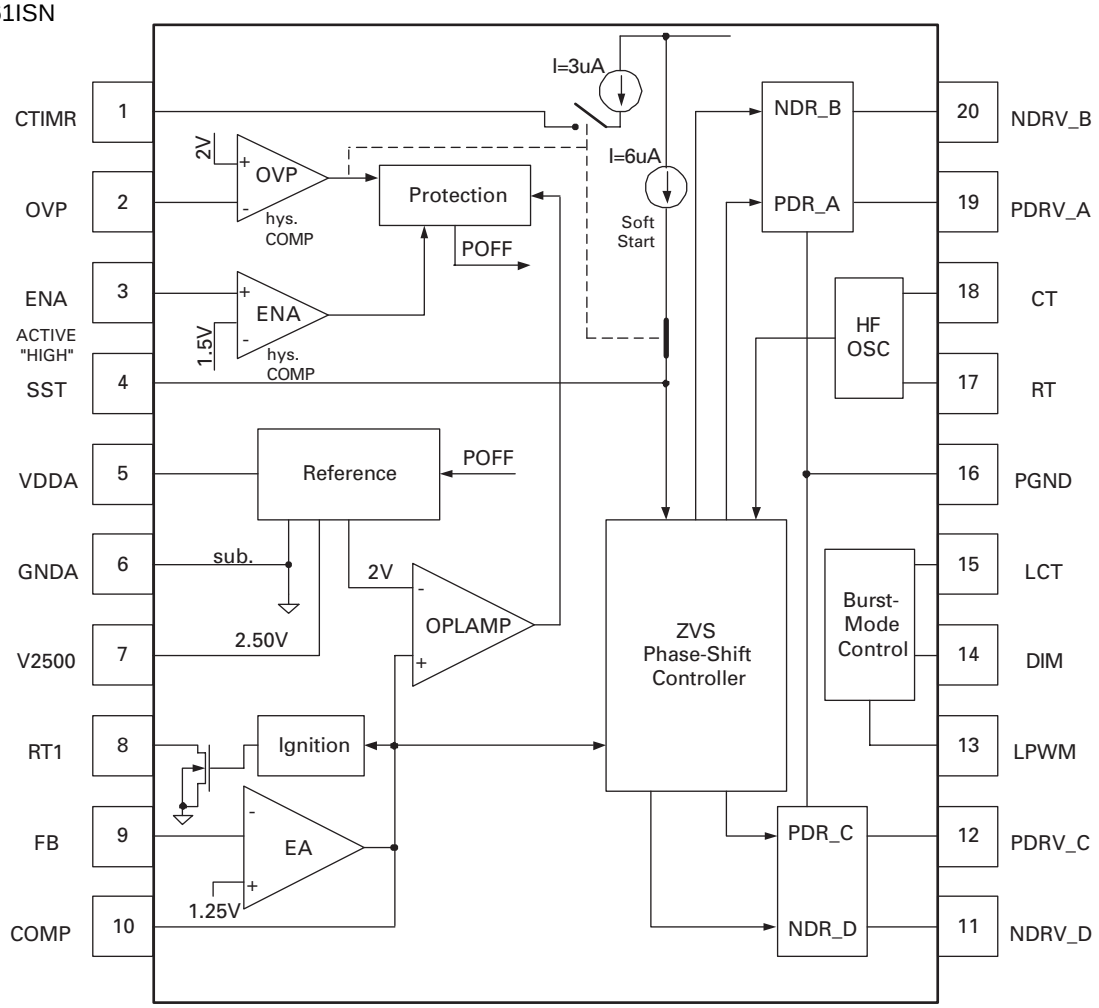

S-29221BR0I-J8T1

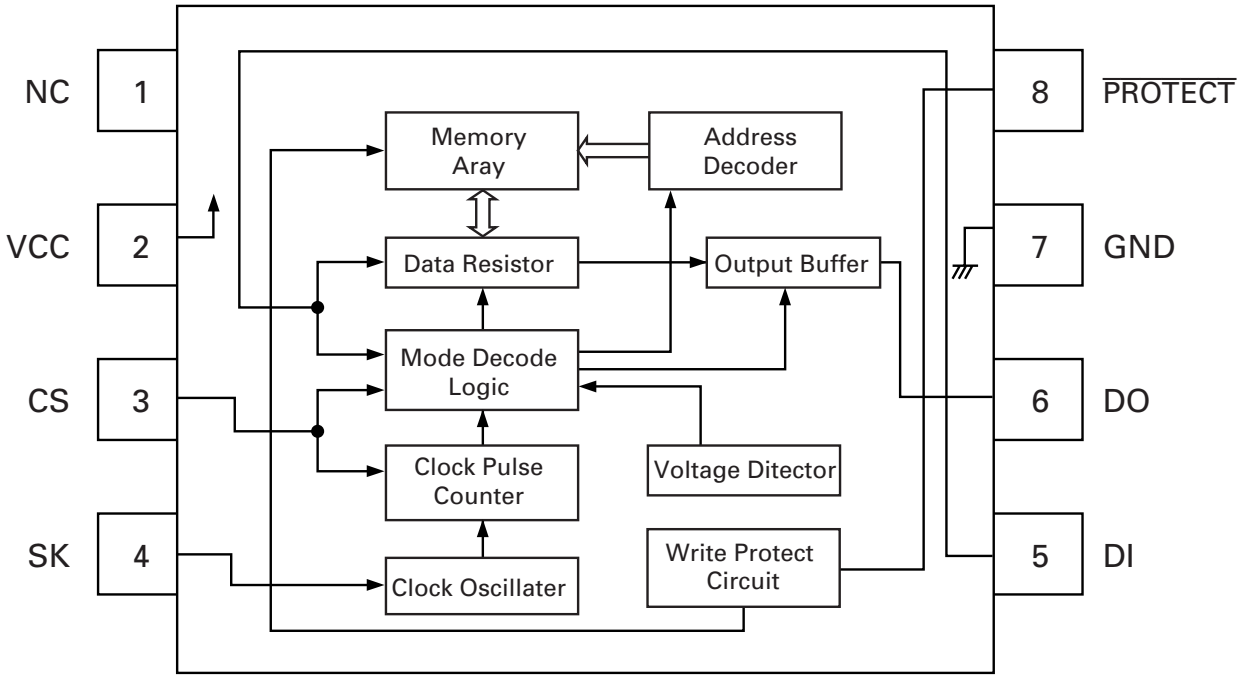

TPS850

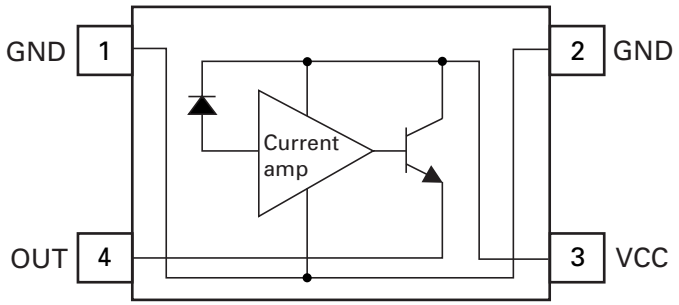

BD6171KV

● Pin Arrangement Chart

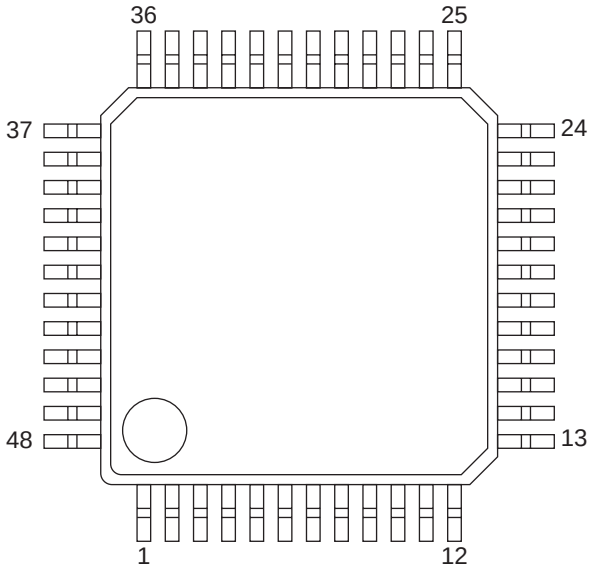

BD6171KV

● Block Diagram Chart

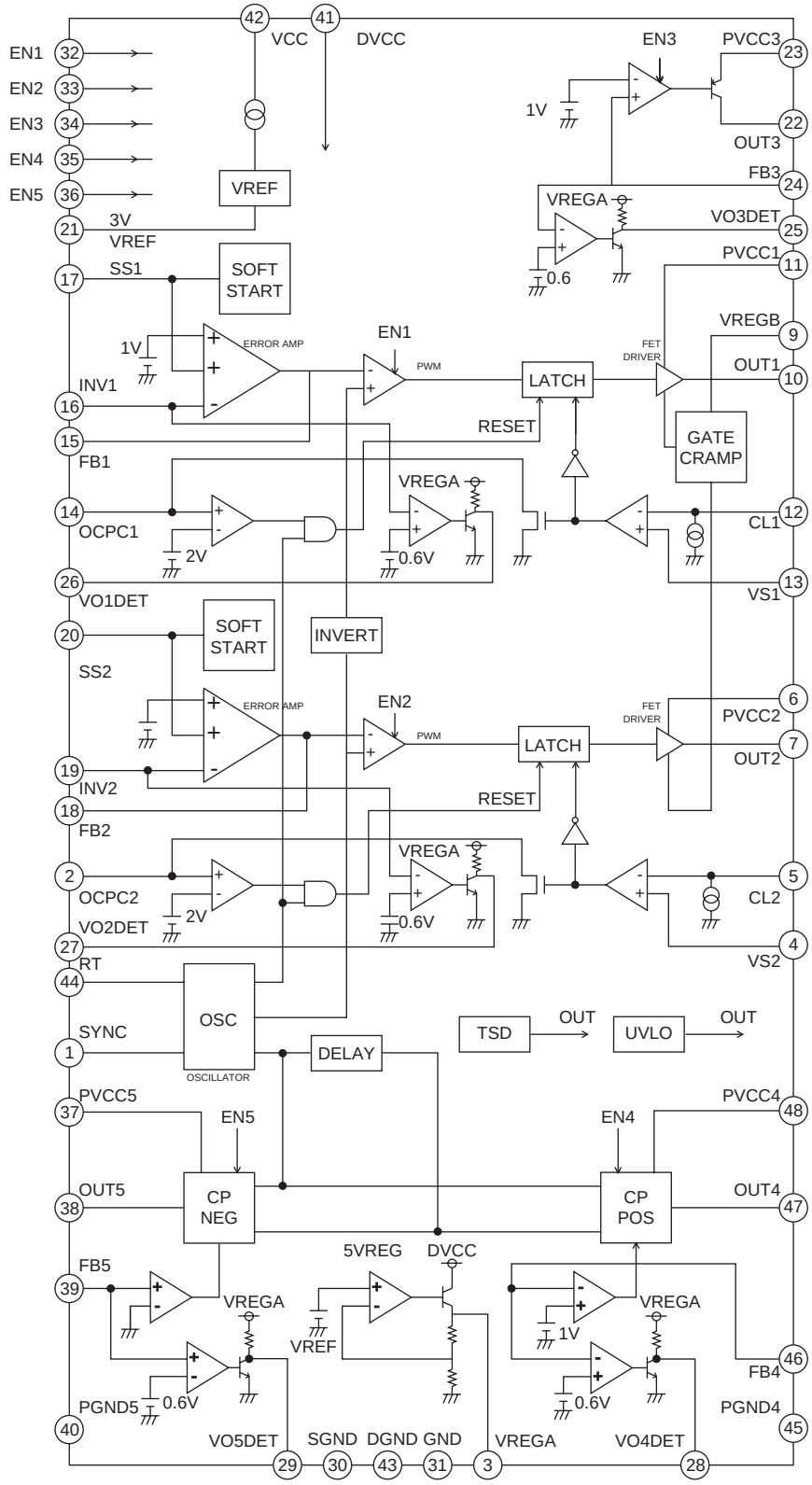

● Pin Functions (PE5478A)

Pin No.	Pin Name	I/O	Function and Operation
1	STOC	O	Navigation microcomputer data output (UART)
2	FCONT	O	AM noise measures output
3	$\overline{\text{CSENSOUT}}$	O	Flap close sense output
4,5	NC		Not used
6	MTOS	I	Monitor microcomputer data input (UART)
7	STOM	O	Monitor microcomputer data output (UART)
8	TSCK		Not used
9	EVDD		Power supply
10	EVSS		GND
11	SWACPW	O	Monitor microcomputer power supply output
12	SYSPW	O	System power supply output
13	$\overline{\text{BRST}}$	O	P-BUS : Reset output
14	$\overline{\text{BSRQ}}$	I	P-BUS : Communication request input
15	BSI	I	P-BUS : Data input
16	BSO	O	P-BUS : Data output
17	BSCK	I/O	P-BUS : Clock input/output
18,19	VSELIN1,2	I	AV-BUS : VSEL input 1,2
20	$\overline{\text{AVONIN}}$	I	AV-BUS : AVON input
21	VPP		VSS
22	VCK	O	E. VOL : Clock output
23	VDT	O	E. VOL : Data output
24	VST	O	E. VOL : Strobe pulse output
25	MUTEVOL	O	E. VOL : Mute output
26	RX	I	IP-BUS : Data input
27	TX	O	IP-BUS : Data output
28	IPPW	O	IP-BUS : Driver power supply control output
29	ASENBO	O	IP-BUS : ACC sense output
30	BRXEN	O	P-BUS : Possible to receive output
31	ROMDATA		Not used
32	ROMCLK		Not used
33	ROMCS		Not used
34	$\overline{\text{RESET}}$	I	System reset input
35	XT1		Not used
36	XT2		Not used
37	REGC		Not used
38	X2		Crystal oscillator connection pin
39	X1		Crystal oscillator connection pin
40	VSS		GND
41	VDD		Power supply
42	PCL		Not used
43,44	PULSE0,1	I	Pulse detect input 0,1
45,46	MOT0,1	O	Flap motor driver output 0,1
47	MOTPW	O	Flap motor power supply output
48	$\overline{\text{OPENSW}}$	I	Flap angle OPEN position sense input
49	$\overline{\text{HOMESW}}$	I	Flap angle CLOSE position sense input
50	$\overline{\text{EJECTSW}}$	I	Flap angle CD EJECT position sense input
51	MUTENS	O	Mute output at the time of MIX
52	$\overline{\text{NOSELL}}$	O	Navigation voice Lch MIX control output
53	$\overline{\text{NOSELR}}$	O	Navigation voice Rch MIX control output
54	DRAMPW	O	Navigation control DRAMPW output
55	CCON	O	Navigation control CCON output
56	IRQPW	O	Navigation control IRQPW output
57	SYSRST	O	Navigation control RSTOUT output
58	BVDD		Power supply
59	BVSS		GND
60	ANTPW	O	Auto antenna control output
61	ILMPW	O	Illumination power supply switch output
62	FLAPILM	O	Panel illumination switch output
63	MEMOLED	O	MEMO button LED control output
64	$\overline{\text{DALMON}}$	O	Consumption current reduction output

Pin No.	Pin Name	I/O	Function and Operation
65	AMPSTBY	O	Amp stand-by output
66	$\overline{\text{FANUP}}$	O	Fan motor control output
67	MUTEALL	O	Mute output
68	MUTEAMP	O	Amp mute output
69,70	VFSEL0,1	O	Front monitor source select output 0,1
71	$\overline{\text{FVMUTE}}$	O	Front monitor mute output
72	VRSEL	O	Rear monitor source select output
73	REARON	O	Rear monitor ON output
74	AVDD		A/D converter power supply
75	AVSS		A/D converter GND
76	AVREF		A/D converter reference voltage
77	TUNSL	I	Tuner signal level input
78	NTEMPIN	I	Navigation temperature sense input
79	WREMIN	I	Wired remote control analog value input
80	$\overline{\text{WCONT}}$	I	Wired remote control SEL input
81	$\overline{\text{RST3}}$	I	Navigation control reset input
82	$\overline{\text{XCCSTBY}}$	I	Navigation stand-by OK input
83	CPUWDT	I	Navigation watch dog timer input
84	TELIN	I	Telephone mute input
85	PBSENS	I	Parking brake sense input
86	$\overline{\text{REVSENS}}$	I	Reverse gear sense input
87	TESTIN	I	Test mode input
88	TIMEOUT	I	Timeout input
89	NMI		Pull down
90	$\overline{\text{BSENS}}$	I	Backup sense input
91	$\overline{\text{ASENS}}$	I	ACC sense input
92	$\overline{\text{ILMSENS}}$	I	Illumination sense input
93	$\overline{\text{DVDEJECT}}$	I	DVD EJECT key input
94	$\overline{\text{CDEJECT}}$	I	CD EJECT key input
95	TUNCE1	O	Tuner : PLL chip enable output
96	$\overline{\text{TUNCE2}}$	O	Tuner : EEPROM chip enable output
97	TUNPDI	I	Tuner : Data input (SIO)
98	TUNPDO	O	Tuner : Data output (SIO)
99	TUNCK	O	Tuner : Data clock output (SIO)
100	CTOS	I	Navigation microcomputer data input (UART)

* PE5478A

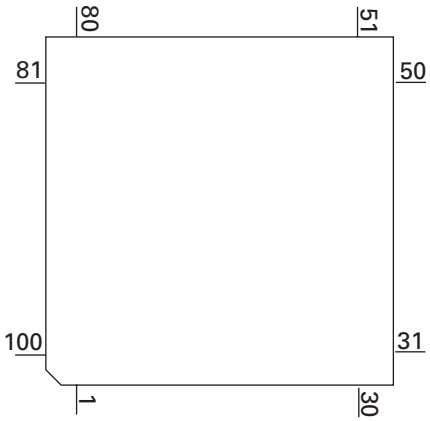

* TC74VHCT08AFTS1

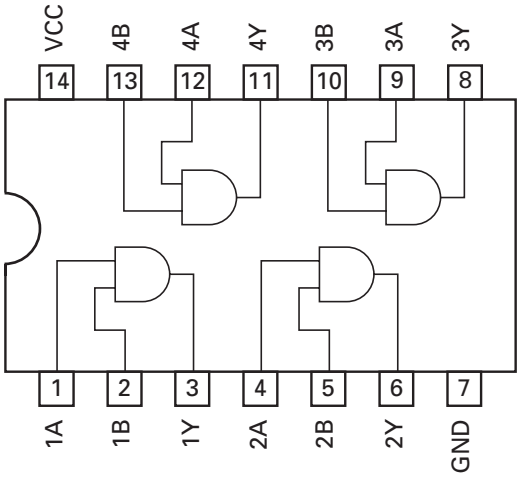

NJM2561F1

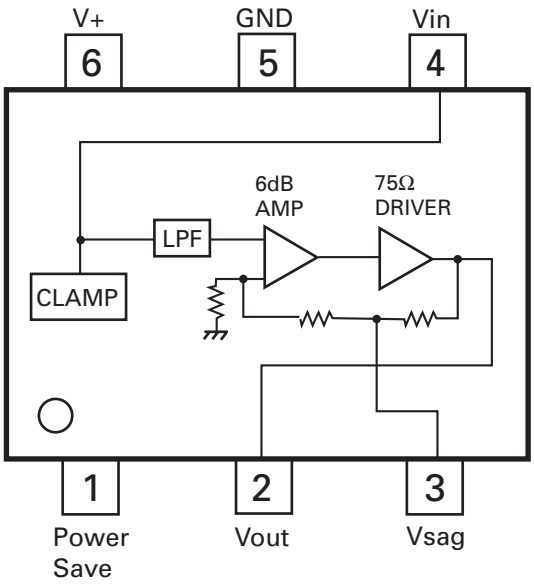

TA2050FS1

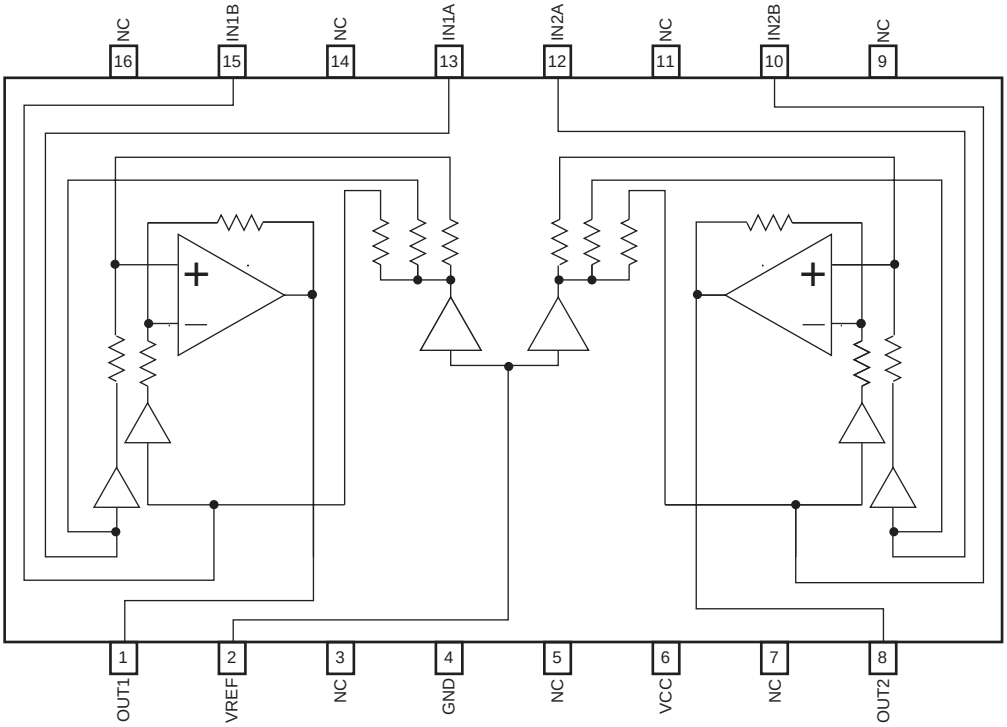

● Pin Functions(BA5835FP)

Pin No.	Pin Name	Function and Operation
1	VR	Input pin for reference voltage
2	OPIN2(+)	Input pin for non-inverting input for CH2 preamplifier
3	OPIN2(-)	Input pin for inverting input for CH2 preamplifier
4	OPOUT2	Output pin for CH2 preamplifier
5	OPIN1(+)	Input pin for non-inverting input for CH1 preamplifier
6	OPIN1(-)	Input pin for inverting input from CH1 preamplifier
7	OPOUT1	Output pin for CH1 preamplifier
8	GND	Ground pin
9	MUTE	Mute control pin
10	POWVCC1	Power supply pin for CH1, CH2, and CH3 at "Power" stage
11	VO1(-)	Driver CH1 - Negative output
12	VO1(+)	Driver CH2 - Positive output
13	VO2(-)	Driver CH2 - Negative output
14	VO2(+)	Driver CH2 - Positive output
15	VO3(+)	Driver CH2 - Positive output
16	VO3(-)	Driver CH2 - Negative output
17	VO4(+)	Driver CH4 - Positive output
18	VO4(-)	Driver CH4 - Negative output
19	POWVCC2	Power supply pin for CH4 at "Power" stage
20	GND	Ground pin
21	CNT	Control pin
22	LDIN	Loading input
23	OPOUTSL	Output pin for preamplifier for thread
24	OPINLSL	Input pin for preamplifier for thread
25	OPOUT3	CH3 preamplifier output pin
26	OPIN3(-)	Input pin for inverting input for CH3 preamplifier
27	OPIN3(+)	Input pin for non-inverting input for CH3 preamplifier
28	PREVCC	PreVcc

BA5835FP

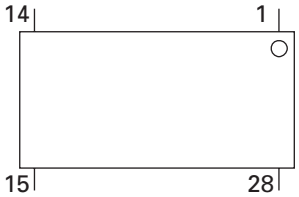

NJM2885DL1-33

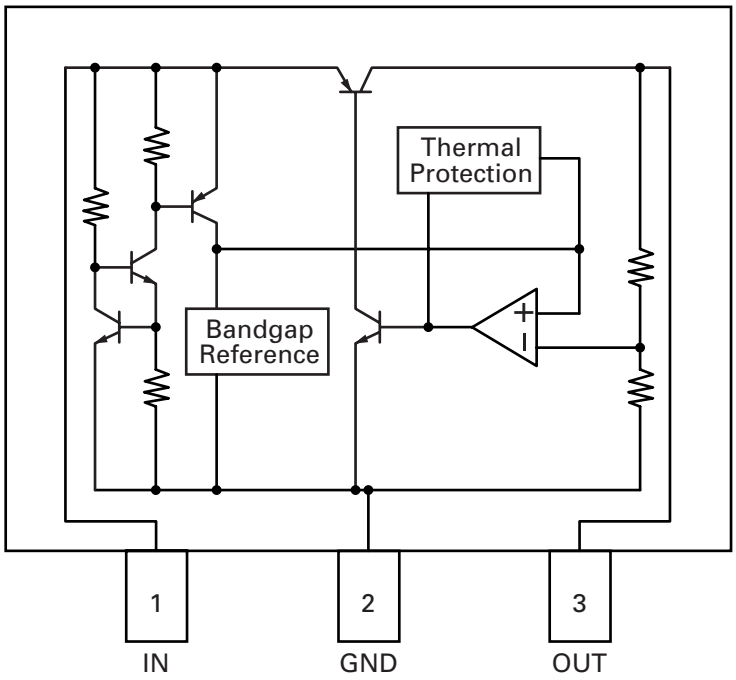

● Pin Functions(PE5454B)

Pin No.	Pin Name	I/O	Format	Function and Operation
1	AVREF			A power supply Positive power supply(5V)
2	AVSS			A power supply GND
3	RFOK	O	C	Output of state of RFOK
4	NC			Not used
5	EVDD			E power supply Positive power supply
6, 7	NC			Not used
8	IC/FLMD0			IC : VSS direct connection/FLMOD0 : Pull-down
9	VDD			Positive power supply(5V)
10	REGC			Connected to the capacity stabilizing output of the regulator
11	VSS			GND
12	X1	I		Oscillator connection for mainclock
13	X2			Oscillator connection for mainclock
14	$\overline{\text{RESET}}$	I		System reset input
15	XT1	I		Connected to the oscillator for subclock (connected to VSS via the resistor)
16	XT2			Connected to the oscillator for subclock(Open)
17	NC			Connected to EVDD or EVSS via the resistor
18	NC			Not used
19	$\overline{\text{XINT}}$	I	C	CD LSI interruption signal input
20	NC			Connected to VSS via the resistor
21	$\overline{\text{BRST}}$	I		P-Bus reset input
22	BSI	I		P-Bus serial data input
23	BSO	O	C	P-Bus serial data output
24	$\overline{\text{BSCK}}$	I/O	/C	P-Bus serial clock input/output
25	FTXD	O	C	For flash rewriting output(transmitted signal)
26	FRXD	I		For flash rewriting input(received signal)
27	BRXEN	I/O	/C	It is possible to receive P-Bus input/output
28	$\overline{\text{BSRQ}}$	I/O	/C	P-Bus service request demand input/output
29	NC			Not used
30	DSCSNS	I		Disc state sense input
31	8EJ(S905)	I		Input of detection of 8 cm disc ejection
32	12EJ(S904)	I		Input of detection of 12 cm disc ejection
33	EVSS			E power supply GND
34	EVDD			E power supply Positive power supply
35, 36	SRAMLEVEL0, 1	O	C	SRAM level meter output
37	EMPH	O	C	Emphasis information output
38	$\overline{\text{EMPH}}$	O	C	Emphasis information output
39-42	NC			Not used
43	$\overline{\text{ADENA}}$	O	C	A/D reference voltage supply control output
44	LRCKOK	O	C	(DOUT mute output)
45	SRAMLEVEL2	O	C	SRAM level meter output
46	CD3VON	O	C	CD +3.3V power supply control output
47	CONT	O	C	Servo driver power supply control output
48	$\overline{\text{XRST}}$	O	C	CD LSI reset control output
49	VDCONT	O	C	VD power supply control output
50	ROMDATA	I/O	/C	E2PROM data input/output
51	ROMCS	O	C	E2PROM chip selection output
52	ROMCK	O	C	E2PROM clock output
53	LOEJ	O	C	The direction change output of LOAD/EJECT
54	CLCONT	O	C	Driver input change output
55	CDMUTE	O	C	CD mute control output
56-58	NC			Not used
59	$\overline{\text{XCS}}$	O	C	CD LSI chip selection output
60	NC			Not used
61	$\overline{\text{XWAIT}}$	I		CD LSI write control signal input
62	CLKOUT	O	C	Internal system clock output(Open)
63	LOCK	I		Spindle lock input
64	NC			Not used
65	$\overline{\text{XWRITE}}$	O		CD LSI write control signal output
66	NC			Not used

Pin No.	Pin Name	I/O	Format	Function and Operation
67	XREAD	O		CD LSI read control signal output
68	XASTB	O		CD LSI address strobe output
69	BVSS			B power supply GND
70	BVDD			B power supply Positive power supply
71-83	AD0-12	I/O	/C	Address/data Bus 0-12
84-86	NC			Not used
87	FMODE	I		For flash rewriting Connected to VSS via the resistor
88	FLRQ	O	C	For flash rewriting
89-93	NC			Not used
94	CSENS	I		Flap closing sense input
95	TYPE_A/D	I		CD-DA analog/digital output change setup
96	TESTIN	I		Chip check test program starting input
97	HOME	I		Home SW sense input
98	TEMP	I		Temperature information sense input
99	VDSENS	I		VD power supply short sense input
100	NC			Not used

* PE5454B

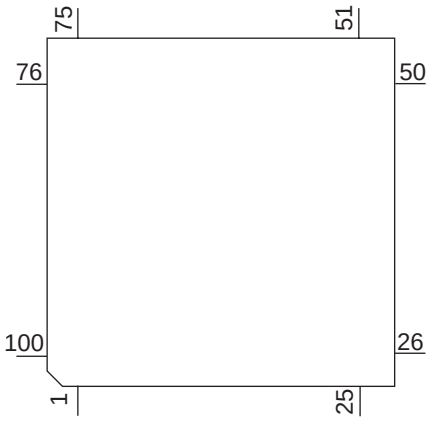

Format	Meaning
C	CMOS

● Pin Functions(UPD63763GJ)

Pin No.	Pin Name	I/O	Function and Operation
1	D.VDD		Power supply for digital circuits
2	D1.GND		GND for 1.6V digital circuits
3	$\overline{\text{RESET}}$	I	Input of reset
4-8	AB12-8	I	Address bus 12-8 from the microcomputer
9-16	AD7-0	I/O	Address/data bus 7-0 to the microcomputer
17	$\overline{\text{CS}}$	I	Chip selection
18	ASTB	I	Address strobe
19	$\overline{\text{READ}}$	I	Control signals(read)
20	$\overline{\text{WRITE}}$	I	Control signals(write)
21	$\overline{\text{WAIT}}$	O	Control signals(wait)
22	INTQ	O	Interruption signals to the external microcomputer
23, 24	IFMODE0, 1	I	Switching the microcomputer I/F 0, 1
25	D1.VDD		Power supply for 1.6V digital circuits
26	DA.VDD		Power supply for DAC
27	ROUT	O	Output of audio for the right channel
28	DA.GND		GND for DAC
29	REGC		Connected to the capacitor for band gap
30	DA.GND		GND for DAC
31	LOUT	O	Output of audio for the left channel
32	DA.VDD		Power supply for DAC
33	X.VDD		Power supply for the crystal oscillator
34	XTAL	I	Connected to the crystal oscillator(16.9344MHz)
35	$\overline{\text{XTAL}}$	O	Connected to the crystal oscillator(16.9344MHz)
36	X.GND		Ground for the crystal oscillator
37	VDDREG15		Control of 1.6V regulator
38	PWMSW0	I	Setup 0 for PWM output(SD, MD)
39-41	TEST3-1	I	Connected to GND
42	PWMSW1	I	Setup 1 for PWM output(FD, TD)
43	TESTEN	I	Connected to GND
44	D1.GND		GND for 1.6V digital circuits
45	DIN	I	Input of audio data
46	DOUT	O	Output of audio data
47	SCKIN	I	Clock input for audio data
48	SCKO	O	Clock output for audio data
49	LRCKIN	I	Input of LRCK for audio data
50	LRCK	O	Output LRCK for audio data
51	$\overline{\text{XTALEN}}$	I	Permission to oscillate 16.9344MHz
52	D1.VDD		Power supply for 1.6V digital circuits
53	RFCK/HOLD	O	Output of RFCK/HOLD signal
54	WFCK/MIRR	O	Output of WFCK/MIRR signal
55	PLCK/RFOK	O	Output of PLCK/Output of RFOK
56	LOCK/RFOK	O	Output of LRCK/Output of RFOK
57	C1D1/C8M	O	Information on error correction/C8M : 8MHz
58	C1D2/C16M	O	Information on error correction/C16M : 16MHz
59	C2D1/RMUTE	O	Information on error correction/Mute for Rch
60	C2D2/LMUTE	O	Information on error correction/Mute for Lch
61	C2D3/SHOCK	O	Information on error correction/Detection of vibration
62	D1.GND		GND for 1.6V digital circuits
63	C33M	O	Output of 33.8688MHz(CLK for SDRAM)
64	($\overline{\text{RCS}}$)	O	DRAM $\overline{\text{CS}}$
65	RA11	O	Output of DRAM address 11
66	(CKE)	O	Output of DRAM CKE
67	$\overline{\text{RAS}}$	O	Output of DRAM $\overline{\text{RAS}}$
68	$\overline{\text{CAS0}}$(LDQM)	O	Output of DRAM lower $\overline{\text{CAS}}$(LDQM)
69	$\overline{\text{CAS1}}$(UDQM)	O	Output of DRAM upper $\overline{\text{CAS}}$(UDQM)
70	$\overline{\text{WE}}$	O	Output of DRAM $\overline{\text{WE}}$
71	$\overline{\text{OE}}$($\overline{\text{CAS}}$)	O	Output of DRAM $\overline{\text{OE}}$($\overline{\text{CAS}}$)
72	D.GND		Ground for digital circuits
73-88	RDB0-15	I/O	Input/output of DRAM data0-15
89-99	RA0-10	O	Output of DRAM address0-10

Pin No.	Pin Name	I/O	Function and Operation
100	D.VDD		Power supply for digital circuits
101	FD+	O	Output of focus drive PWM +
102	FD-	O	Output of focus drive PWM -
103	TD+	O	Output of tracking drive PWM +
104	TD-	O	Output of tracking drive PWM -
105	SD+	O	Output of thread drive PWM +
106	SD-	O	Output of thread drive PWM -
107	MD+	O	Output of spindle drive PWM +
108	MD-	O	Output of spindle drive PWM -
109	REFOUTSV	O	REFOUT for servo
110	AD.VDD		Power supply for ADC
111	EFM	O	Output of EFM signals
112	ASY	I	Input of asymmetry
113	ATEST	O	Analog tests
114	RFI	I	Input of RF
115	AD.GND		Ground for the analog system
116	AGCO	O	Output of RF
117	C3T	O	Connection to the capacitor for detecting 3T
118	AGCI	I	Input of AGC
119	RFO	O	Output of RF(AGC)
120, 121	EQ2, 1	I	Equalizer 2, 1
122	RF2-	I	Reversal input of RF2
123	RF-	I	Reversal input of RF
124	A.GND		Ground for the analog system
125	A	I	Input of A
126	C	I	Input of C
127	B	I	Input of B
128	D	I	Input of D
129	F	I	Input of F
130	E	I	Input of E
131	VREFIN	I	Input of reference voltage
132	A.VDD		Power supply for the analog system
133	REFOUT	O	Output of reference voltage
134	REFC	I	Connected to the capacitor for output of REFOUT
135	FE-	I	Reversal input of FE
136	FEO	O	Output of FE
137	ADIN	I	Input of FE, TE A/D converter
138	TE-	I	Reversal input of TE
139	TEO	O	Output of TE
140	TE2	O	TE2
141	TEC	I	TEC
142	LD	O	Output of LD
143	PD	I	Input of PD
144	D.GND		Ground for digital circuits

* UPD63763GJ

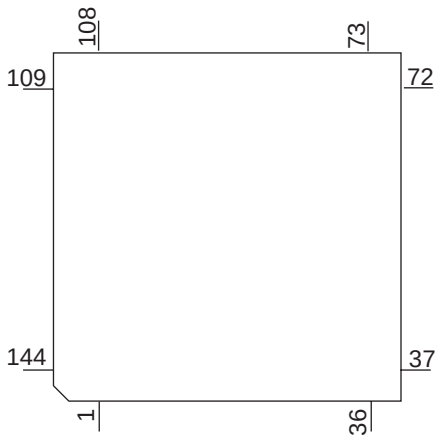

* PE5430A

● Pin Arrangement Chart

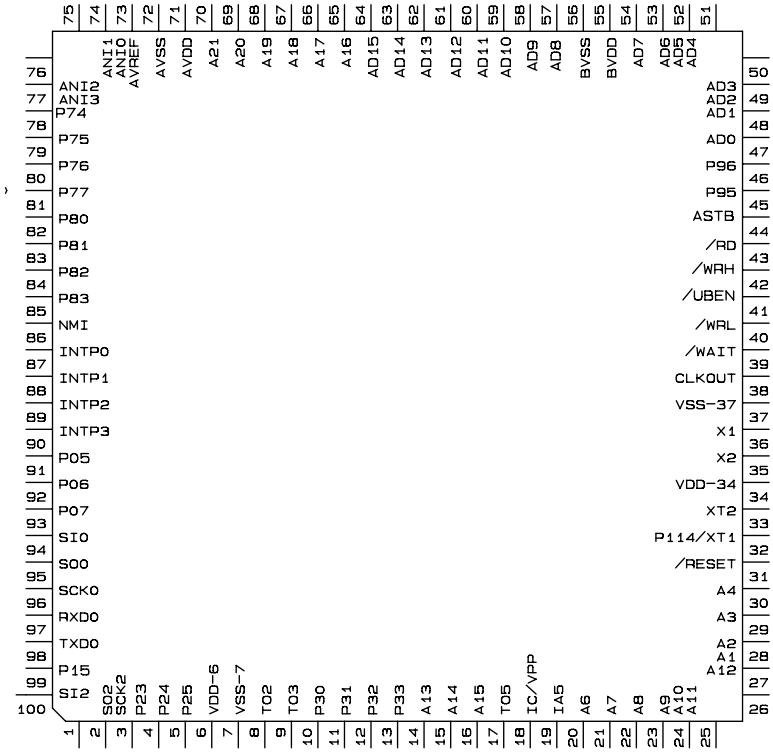

● Block Diagram Chart

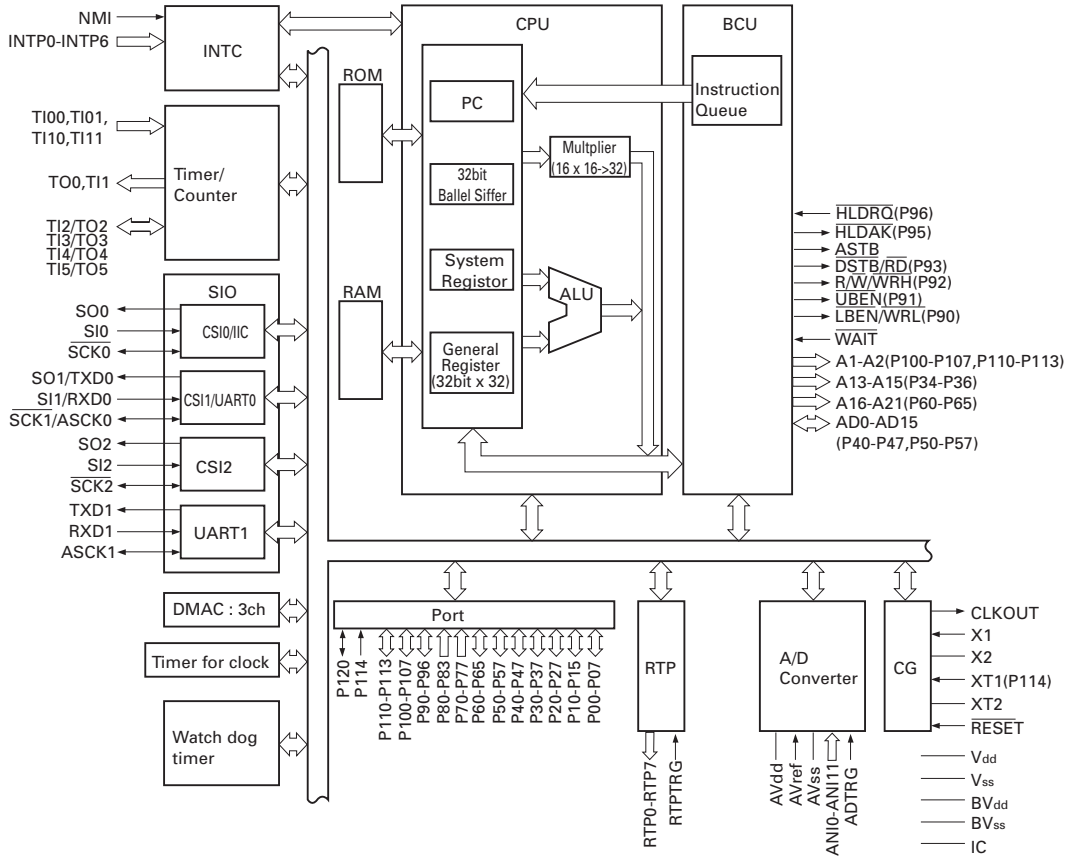

● FM/AM Tuner Unit

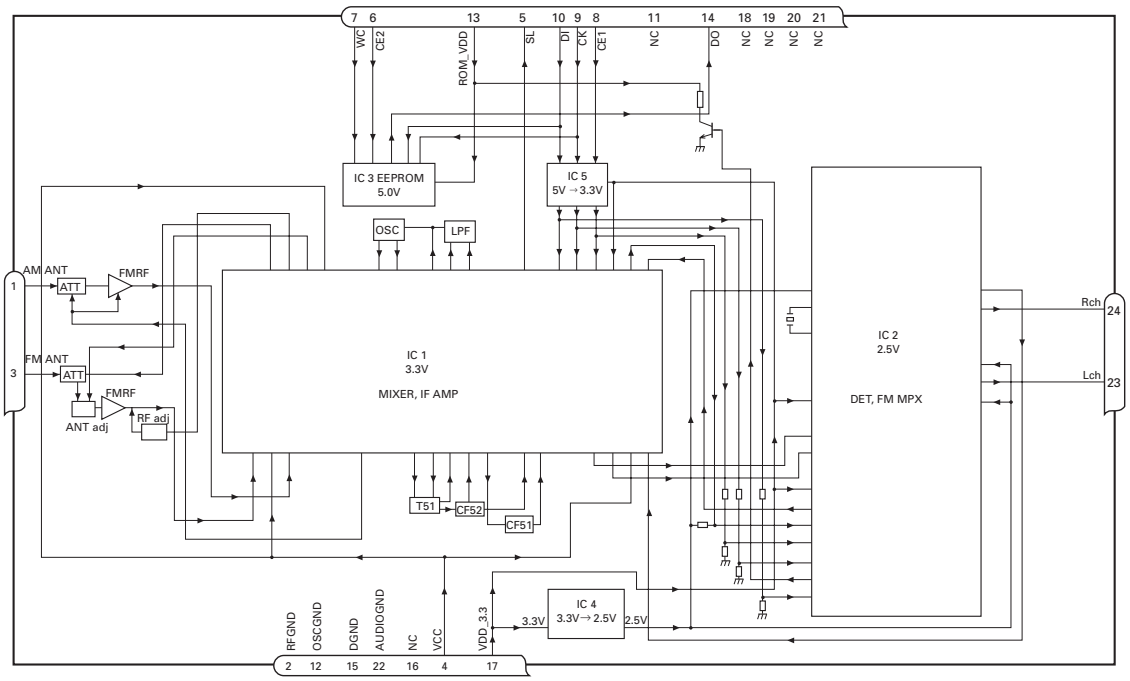

No.	Symbol	I/O	Explain	
1	AMANT	I	AM antenna input	AM antenna input high impedance AMANT pin is connected with an all antenna by way of 4.7μH. (LAU type inductor) A series circuit including an inductor and a resistor is connected with RF ground for the countermeasure against the hum of power transmission line.
2	RFGND		RF ground	Ground of antenna block
3	FMANT	I	FM antenna input	Input of FM antenna 75Ω Surge absorber(DSP-201M-S00B) is necessary.
4	VCC		power supply	The power supply for analog block. D.C 8.4V ± 0.3V
5	SL	O	signal level	Output of FM/AM signals level
6	CE2	I	chip enable-2	Chip enable for EEPROM "Low" active
7	WC	I	write control	You can write EEPROM, when EEPROM write control is "Low". Ordinary non connection
8	CE1	I	chip enable-1	Chip enable for AF•RF "High" active
9	CK	I	clock	Clock
10	DI	I	data in	Data input
11	NC		non connection	Not used
12	OSCGND		osc ground	Ground of oscillator block
13	ROM_VDD		power supply	Power supply for EEPROM pin 13 is connected with a power supply of micro computer.
14	DO	O	data out	Data output
15	DGND		digital ground	Ground of digital block
16	NC		non connection	Not used
17	VDD_3.3		power supply	The power supply for digital block. 3.3V ± 0.2V
18	NC		non connection	Not used
19	NC		non connection	Not used
20	NC		non connection	Not used
21	NC		non connection	Not used
22	AUDIOGND		audio ground	Ground of audio block
23	L ch	O	L channel output	FM stereo "L-ch" signal output or AM audio output
24	R ch	O	R channel output	FM stereo "R-ch" signal output or AM audio output

7.3 EXPLANATION
7.3.1 MECHANISM DESCRIPTIONS

● FLAP Operation Specification

1. Outline

Slide open method is adopted, and 4 positions of closed, angle adjustment, half open and full open are considered the basic positions.

(1) Closed

This status is always taken once at power supply ON since flap is completely closed and it is the reference point for flap operation startup.

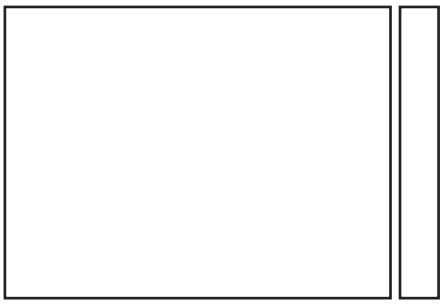

(2) Angle Adjustment

Position for visibility adjustment.
The angle can be adjusted in 5 stages from the closed position to the maximum angle (approximately 20°) within the adjustable range by the angle key.
The angle has toggle operation, and it executes close operation as follows when it reaches the maximum angle.

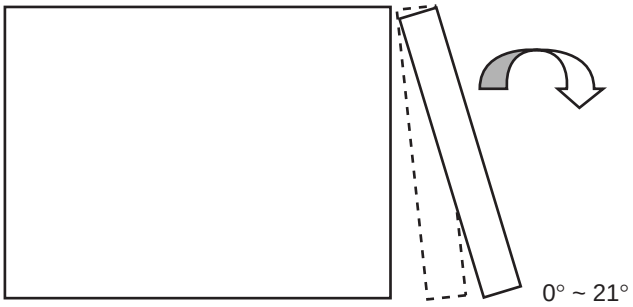

(3) Half Open

Position for DISC replacement on upper stage (CD).
It slides down to angle 12 when OPEN/CLOSE key is pressed quickly at the closed or angle adjustment position.
CD insertion/EJECT operation is possible from this position.
At the half open position, LAST position is restored when OPEN/CLOSE key is pressed quickly.

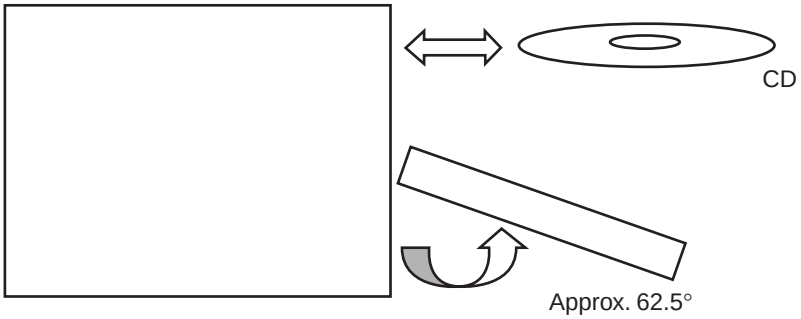

(4) Full Open

Position for DISC replacement on lower stage (DVD).
This position is set when OPEN/CLOSE key is pressed for more than 2 second at all positions except full open.
Map DISC (DVD) can only be inserted/ejected at this position.
At the full open position, the closed position is restored when OPEN/CLOSE key is pressed for more than 2 second, and LAST position is restored when it is pressed quickly.

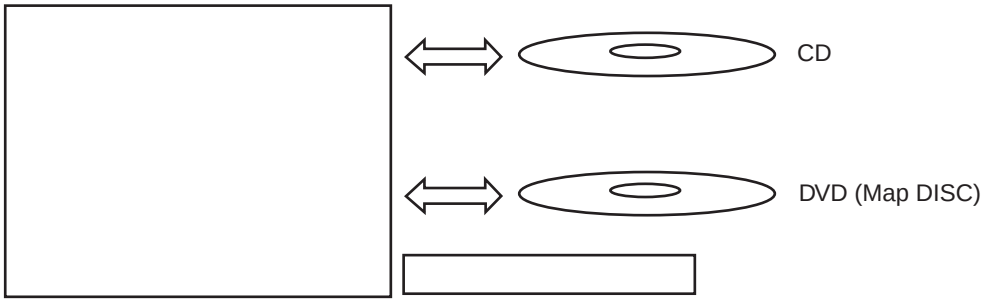

(5) Error Angle

Besides the above 4 positions that can be operated by the user, this system has the error angle (approx. 45°) as an escape from danger in case of stopping due to an obstruction.
If operation becomes impossible in the angle of 45° or smaller, it opens to this position so that the obstruction (assuming a finger getting caught) can be released completely.

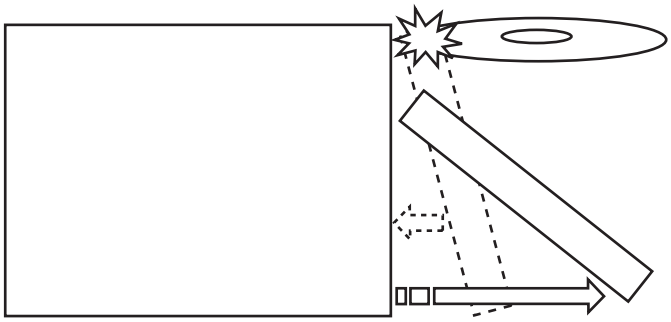

2. FLAP Operation Specification

(1) Reset Start
- No operation at full open position. It moves to the closed position at positions other than full open.

(2) ACC ON
- No operation at full open or closed position.
- At ANGLE/half open position, it closes once and then returns to the LAST position.

(3) ACC OFF
- No operation at closed position.
- It closes in 3 seconds when it is at positions other than closed.
  However, it shifts to standby status when DISC is at half position.
- If it is in FLAP operation, it closes after completing the current operation.

(4) ACC OFF/ON
- If ACC ON is detected within 3 seconds after ACC OFF, the current condition is continued.
- DISC is at half position, it is closed after loading.

* “ACC detection” here includes chatter period.
That is, “ACC detection within 3 seconds” means 2.5 seconds + chatter period 0.5 seconds, and the actual ACC OFF/ON interval is “within 2.5 seconds.”

(5) DISC Insertion
- When DISC is inserted for either CD or DVD, it restores to the LAST position.

(6) ANGLE Key
- Angle is adjusted in 5 steps from FULL CLOSE (0°) to the maximum angle (approx. 20°) (1STEP slides in horizontal direction by approx. 6mm).
- It is closed when the system is at the maximum angle.
- Though continuous operation is executed by pressing the key for more than 1 second, it stops when the maximum angle is reached.
- If the opening exceeds the maximum angle, ANGLE key operation becomes disabled.

(7) Pressing OPEN key quickly
- If the system is at FULL CLOSE/ANGLE position, it opens to the half open position (CD insertion opening position) in 1 action.
- If it is at half open position, it restores the LAST position.
- If it is at half open position and DISC at half position, it restores the LAST position after reloading.
- CD EJECT key becomes enabled at the opening of half open position or later by this operation.

(8) OPEN Key Pressed for 2 Second or Longer
- If FLAP angle is at positions other than full open, it moves to full open position.
- DVD EJECT key becomes enabled only at the full open position by this operation.

(9) Obstructions
a. During CLOSE operation
- It opens to 45° if the angle at which operation was disabled was less than 45°.
- It shifts to the open direction by 1 angle if the angle at which operation was disabled was 45° or larger.

b. During OPEN operation
- It shifts to the close direction by 1 angle from the angle at which operation was disabled.

3. Correlation of slide position and angle

	Pulse A	Pulse B	CD EJECT OKSENS	OPEN SENS	CLOSE SENS	POSITION	
CLOSE ↑	0	0	1	1	0	0	ANGLE 0 (FULL CLOSE)
	0	1	1	1	0		
	1	1	1	1	0 – 1		
	1	0	1	1			
	0	0	1	1	1	1	ANGLE 1
	0	1	1	1	1		
	1	1	1	1	1		
	1	0	1	1	1		
	0	0	1	1	1	2	ANGLE 2
	0	1	1	1	1		
	1	1	1	1	1		
	1	0	1	1	1		
	0	0	1	1	1	3	ANGLE 3
	0	1	1	1	1		
	1	1	1	1	1		
	1	0	1	1	1		
	0	0	1	1	1	4	ANGLE 4
	0	1	1	1	1		
	1	1	1	1	1		
	1	0	1	1	1		
	0	0	1	1	1	5	ANGLE 5
	0	1	1	1	1		
	1	1	1	1	1		
	1	0	1	1	1		
	0	0	1	1	1	6	–
	0	1	1	1	1		
	1	1	1	1	1		
	1	0	1	1	1		
	0	0	1	1	1	7	–
	0	1	1	1	1		
	1	1	1	1	1		
	1	0	1	1	1		
	0	0	1	1	1	8	–
	0	1	1	1	1		
	1	1	1	1	1		
	1	0	1	1	1		
	0	0	1	1	1	9	–
	0	1	1	1	1		
	1	1	1	1	1		
	1	0	1	1	1		
	0	0	1	1	1	10	–
	0	1	1	1	1		
	1	1	1	1	1		
	1	0	1	1	1		
	0	0	1	1	1	11	–
	0	1	0 – 1	1	1		
	1	1		1	1		
	1	0	0	1	1		
	0	0	0	1	1	12	HALF OPEN (CD insertion)
	0	1	0	1	1		
	1	1	0	1	1		
↓	1	0	0	1	1		
	0	0	0	1	1	13	–
OPEN	0	1	0	0 – 1	1		
	1	1	0		1		
	1	0	0	0	1		
	0	0	0	0	1	14	FULL OPEN (DVD insertion)

4. Emergency Process

4.1. There are following 7 FLAP-related emergency conditions:

(1) Reversed insertion of a CD
(2) Insertion of an unreadable CD
(3) Half loading of CD
(4) Reversed insertion of a DVD
(5) Insertion of an unreadable DVD
(6) Half loading of DVD
(7) When there is a physical obstruction on sliding track

4.2. FLAP process in emergency conditions

For (1), (2), (4), and (5),
- The same process as normal insertion (LAST position after loading) is executed and then the error message is displayed.
- No automatic ejection.

For (3) and (6),
- The same process as normal insertion (LAST position after loading) is executed.
- Basically, no sliding operation is executed if emergency status is detected before the sliding operation.
- If emergency occurs while sliding in open direction, it slides in close direction by 1 position and then stops sliding.
- If emergency occurs while sliding in close direction, it slides in open direction by 1 position and then stops sliding.

For (7),
- If emergency occurs while sliding in open direction, it slides in close direction by 1 position and then stops sliding.
- If emergency occurs while sliding in close direction, it slides in open direction by 1 position and then stops sliding.
- If sliding waveform change by angle key pressing, etc. does not appear for 500ms due to obstruction, etc., it slides in the opposite direction by 1 position and stops sliding.
  If it does not return to the position to be returned by 1 position in error even after 750ms, it stops at the position.
- If close sense SW does not turn ON for 500ms due to obstruction, etc. during transition to full close, it slides in the open direction from the current position by 1 position and then stops operating.
- If open sense SW does not turn ON for 500ms due to obstruction, etc. during transition to half or full open, it slides in the close direction from the current position by 1 position and then stops operating.

4.3. Emergency specification in CD/DVD disc error (above (1) – (6))

- Operation is basically identical to normal discs, and the only special process is error message display.
- No processes such as automatic ejection of CD/DVD in error are executed basically.
- When a disc is inserted once, it can only be ejected by the DISC eject key.

4.4. Emergency display and alarm tone

- In case of a CD/DVD error (including reversed disc), the corresponding error message is displayed so that each error condition can be recognized.
- An alarm tone is sound to notify sliding disabled conditions when sliding operation becomes disabled.

(1) Full Close (ANGLE 0)

	ANGLE key	Quick pressing of OPEN/CLOSE	Pressing of OPEN/CLOSE for more than 1 second	ACC ON	ACC OFF
Normal	1 step DOWN ANGLE 1	Half open	Full open	No change	No change

(2) Angle Adjustment (ANGLE 1~5)

	ANGLE key	Quick pressing of OPEN/CLOSE	Pressing of OPEN/CLOSE for more than 1 second	ACC ON	ACC OFF
Normal	Angle +1 Full close when ANGLE is 7	Half open	Full open	Return to LAST position after full close	Full close

(3) Half Open

	ANGLE key	Quick pressing of OPEN/CLOSE	Pressing of OPEN/CLOSE for more than 1 second	ACC ON	ACC OFF	CD insertion	CD EJECT key
Normal	Disabled	Return to LAST position	Full open	Return to LAST position after full close	Full close	Return to LAST position	CD ejection
CD half	Disabled	Return to LAST position after reloading	Full open	Return to LAST position after reloading	No change		Disabled

(4) Full Open

	ANGLE key	Quick pressing of OPEN/CLOSE	Pressing of OPEN/CLOSE for more than 1 second	ACC ON	ACC OFF	CD insertion	DVD insertion	CD EJECT key	DVD EJECT key
Normal	Disabled	Return to LAST position	Disabled	No change	Full close	Return to LAST position	Return to LAST position	CD ejection	DVD ejection
CD half	Disabled	Return to LAST position after reloading	Disabled	Return to LAST position after reloading	No change			Disabled	
DVD half	Disabled	Return to LAST position after reloading	Disabled	Reloading only	No change				Disabled

(5) Obstruction

	During CLOSE operation	During OPEN operation
Less than 45°	OPEN to 45°	1 angle CLOSE
45° or larger	1 angle OPEN	1 angle CLOSE

7.3.2 OPERATIONAL FLOW CHART

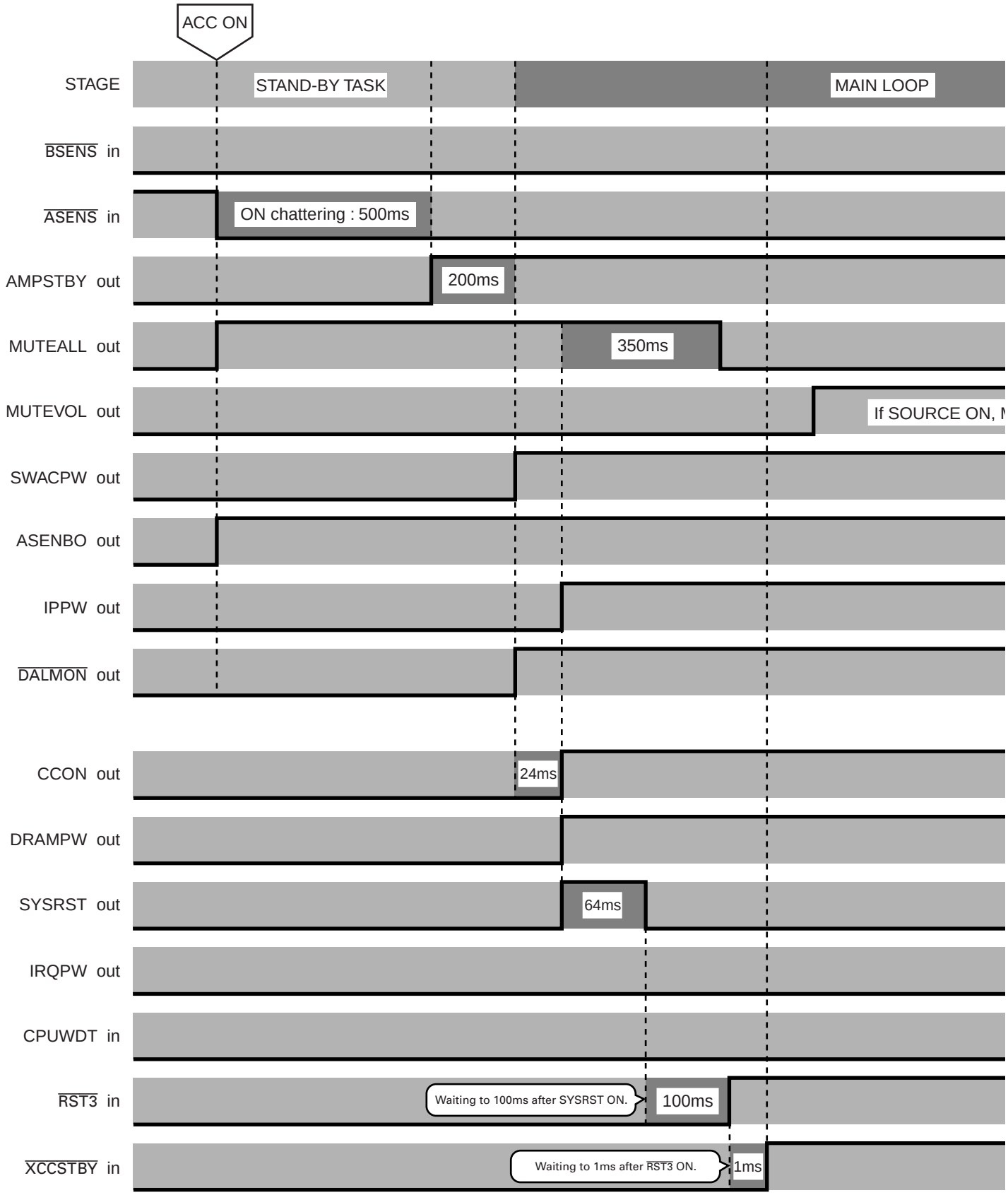

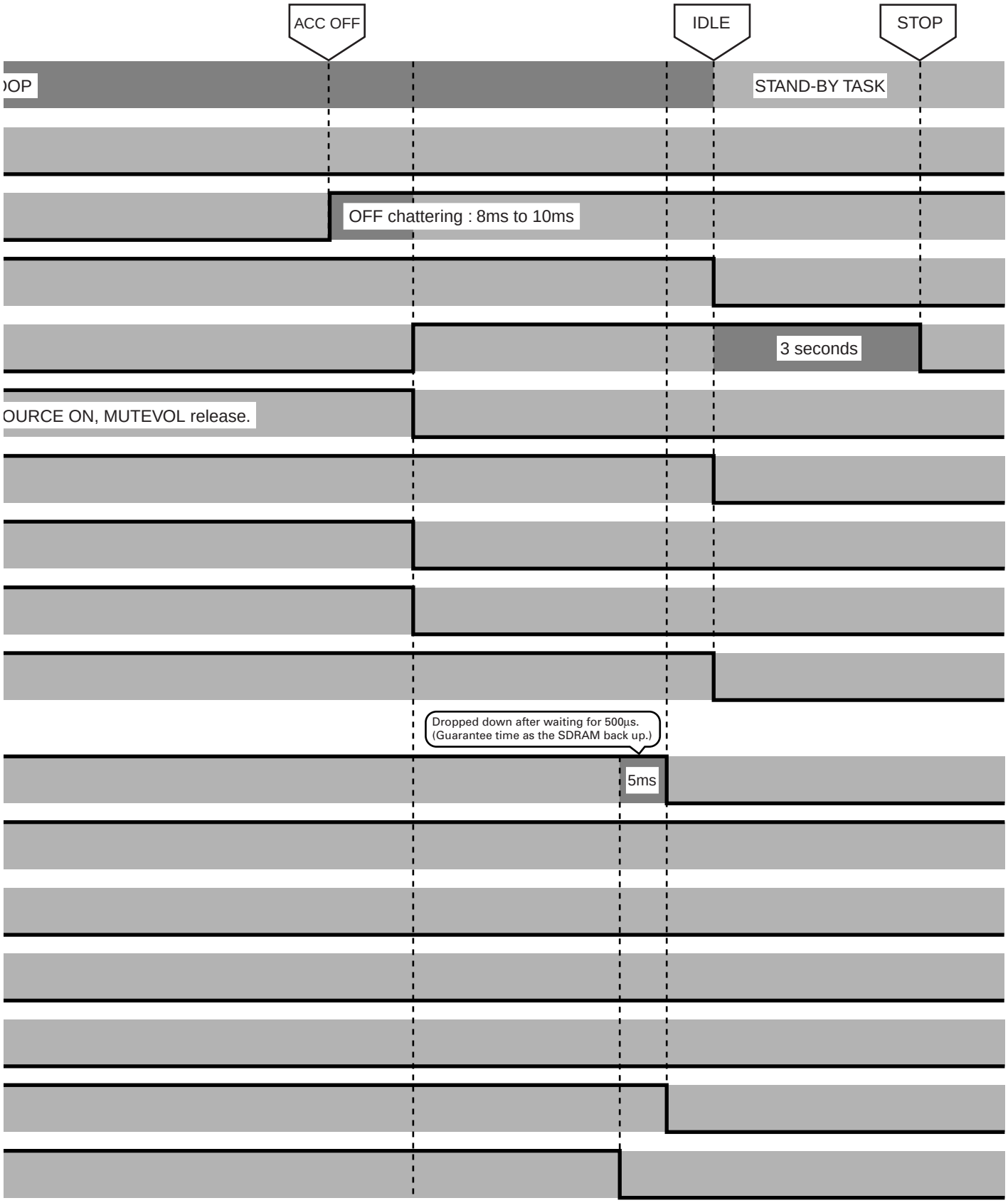
ACC OFF
IDLE
STOP
OOP
STAND-BY TASK
OFF chattering : 8ms to 10ms
3 seconds
OURCE ON, MUTEVOL release.
Dropped down after waiting for 500µs.
(Guarantee time as the SDRAM back up.)
5ms

8. OPERATIONS

Navigation Unit

This section gives information about the names of the parts and main features using the buttons.

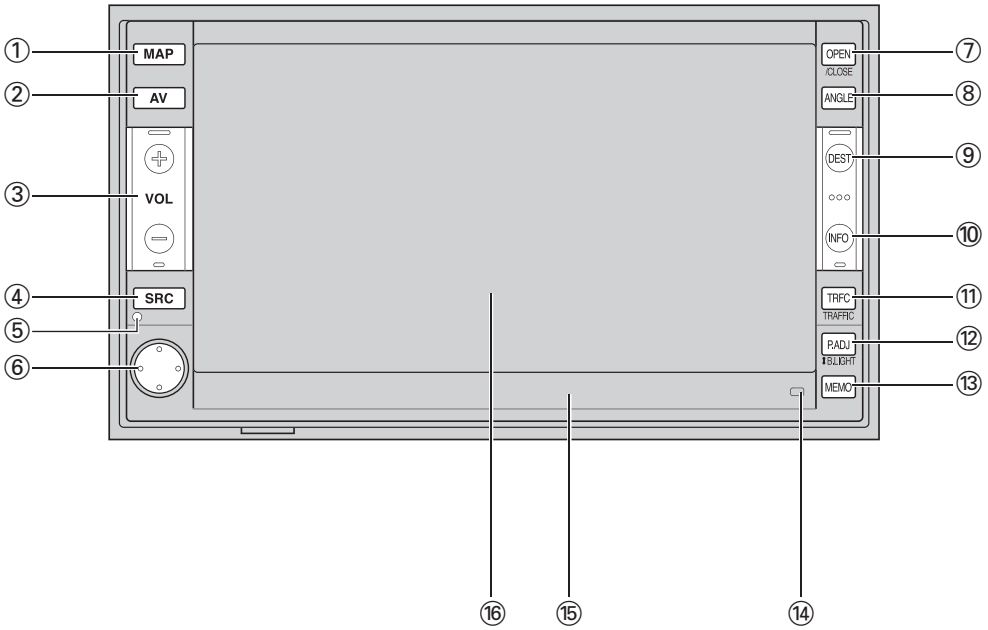

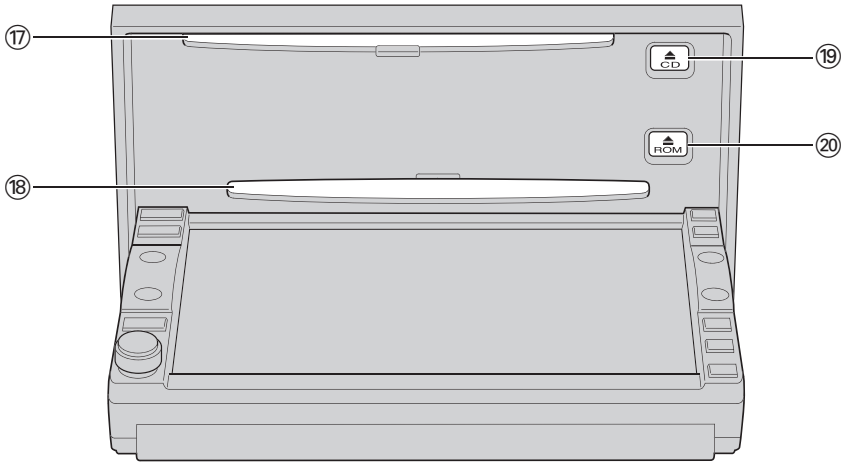

(1) MAP button
Press to view the map or return to guidance. Also, when the map is scrolling, pressing this button returns you to the display of the map of your surroundings. Use to switch the view mode of the navigation when the map of your surroundings is displayed. If you press this button while in the audio operation screen, the screen changes to the Navigation map screen.

(2) AV button
Use to switch between Navigation map screen and audio operation screen.

(3) VOL (+/–) button
Pressing on the + side of the button to increase the volume while pressing on the - side of it to decrease the volume.

(4) SRC (SOURCE) button
This unit is turned on by selecting a source. Press to cycle through all of the available sources.
Press and hold to turn the source off.

(5) RESET button
Press to return to the factory settings (initial settings). Some information items are not erased.

(6) Joystick
Move to do manual seek tuning, fast forward, reverse and track search controls, etc. Push to display the menu for the Audio operation.

(7) OPEN/CLOSE button
Press to open or close the LCD panel and access the CD and DVD-ROM loading slot. Operation varies depending on the position of the LCD panel and the length of time of pressing this button.

(8) ANGLE button
Press to change the LCD panel angle.

(9) DEST button
Press to display the **Destination** menu.

(10) INFO button
Press to display the **Info/Traffic** menu.

(11) TRFC button
When the XM tuner (GEX-P10XMT) is connected*:
Preset button for XM Instant Traffic & Weather audio service. Select XM audio source, and find appropriate Instant Traffic & Weather channel. Hold down this button while on this channel to assign preset.
When the XM tuner (GEX-P10XMT) is not connected:
Not used.

(12) P.ADJ/B.LIGHT button
Press to enter the **PICTURE ADJUST** mode.

Press and hold to turn off the back light of the LCD panel. To turn on the back light, press this button again.

(13) MEMO button
When the XM tuner (GEX-P10XMT) is connected and the XM source is selected*:
Press and hold this button to memorize the track currently being played.
This button flashes when the memorized track is playing on a station other than the one which you are currently on. If you press this button while it is flashing, the station changes to the one playing your track.
When the XM tuner (GEX-P10XMT) is not connected:
Not used.

(14) Ambient light sensor
Senses ambient light. This system automatically adjusts the brightness of the display to compensate for ambient light.

(15) LCD panel

(16) LCD screen

(17) CD loading slot
Insert a CD to play.

(18) DVD-ROM loading slot
Insert a DVD Map Disc.

(19) CD EJECT button
Press to eject the disc from the CD loading slot.

(20) DVD-ROM EJECT button
Press to eject the disc from the DVD-ROM loading slot.

*: GEX-P10XMT sold separately is required, in addition to an active subscription to XM Satellite Radio service.

Turning the Unit On and Selecting a Source

⚠ CAUTION

- **If the program is not installed, see Operation Manual and install the program.**

1 Turn the ignition switch (ACC) ON.
The Navigation System's power supply comes on.

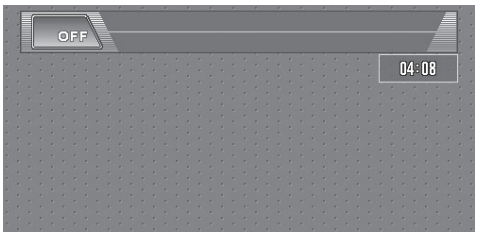

2 Press SRC button to select a source.
Press **SRC** button repeatedly to switch between the following sources:
"**XM**" (XM tuner) — "**SIRIUS**" (SIRIUS tuner) —"**RADIO**" (tuner) — "**TV**" (television) — "**AV**" (video input) — "**S-DVD**" (DVD player/ multi-DVD player) — "**CD**" [CD, MP3/WMA/ WAV](built-in CD drive) — "**M-CD**" (multi-CD player) — "**EXT-1**" (external unit 1) — "**EXT-2**" (external unit 2) — "**AUX**" (Auxiliary equipment)

Press and hold to turn the source off.

In the following cases, the sound source cannot be used

— When a unit corresponding to each source is not connected to this unit.
— When no disc is set in the CD loading slot.
— When no disc is set in the DVD-player ("**S-DVD**").
— When no magazine is set in the multi-CD player.
— When no magazine is set in the multi-DVD player.
— When the "**AUX**" (auxiliary input) is set to off.
— When the "**AV INPUT**" (video input) is not set to "**VIDEO**".

External unit refers to a Pioneer product (such as one available in the future) that, although incompatible as a source, enables control of basic functions by this unit. Two external units can be controlled by this unit. When two external units are connected, the allocation of them to external unit 1 or external unit 2 is automatically set by this unit.

When this unit's blue lead is connected to the vehicle's auto-antenna relay control terminal with the "**AUTO ANTENNA**" is set to "**SOURCE**", the vehicle's antenna extends while this unit's source is turned on. To retract the antenna, turn the source off.

Adjusting the Volume

- **Use VOL (+/–) to adjust the audio sound level.**
  With this product, press **VOL (+/–)** to increase or decrease the volume.

  To adjust the navigation volume, go to the navigation menu.

Turning the Source Off

- **Press SRC button and hold until the source turns off.**

  This product can be switched off by turning the ACC (ignition) OFF.

Inserting/Ejecting a Disc

⚠ WARNING

- **Do not use with the LCD panel left open. If LCD panel is left open, it may result in injury in the event of an accident.**

⚠ CAUTION

- **Do not open and close the LCD panel with hands by force. This may cause malfunction.**
- **When opening, closing and adjusting the angle of the LCD panel, be careful not to get your finger caught.**

The LCD panel will be closed automatically with the turning of the ignition switch.

Inserting a CD

1 Press OPEN/CLOSE button.
The LCD panel opens halfway, and the CD loading slot appears.

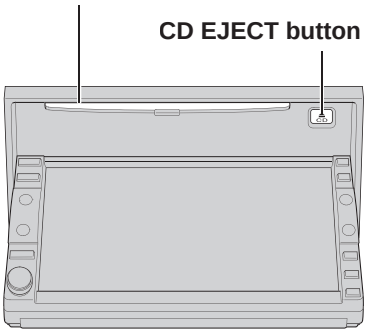

To close the LCD panel, press **OPEN/CLOSE** button again.

2 Insert a CD into the CD loading slot.

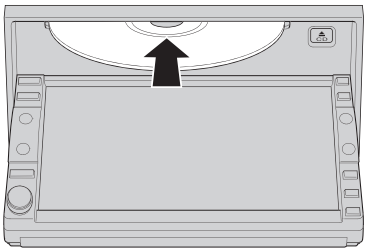

If you insert a CD, the LCD panel closes automatically, and then format reading will start.

Make sure the CD loading slot is empty before inserting a CD into the slot.

When a disc is already loaded in the CD loading slot, select the CD source by pressing **SRC** button.

You can use **AV** button to switch between navigation map displays and audio operation displays.

The built-in CD drive plays one, standard, 12-cm or 8-cm (single) disc at a time. Do not use an adapter when playing 8-cm discs.

Do not insert anything other than a disc into the CD loading slot.

If you cannot insert a disc completely or if a inserted disc is not recognized, check that the label side of the disc is up. Press **CD EJECT** button to eject the disc, and check the disc for damage before inserting the disc again.

If the built-in CD drive does not operate properly, an error message such as ERROR-11 may be displayed.

Ejecting a CD

1 Press OPEN/CLOSE button.
The LCD panel opens halfway.

2 Press CD EJECT button.
The CD is ejected.

3 Press OPEN/CLOSE button.
The LCD panel closes.

Inserting the DVD Map Disc

1 Press and hold OPEN/CLOSE button.
The LCD panel fully opens, and the DVD-ROM loading slot appears.

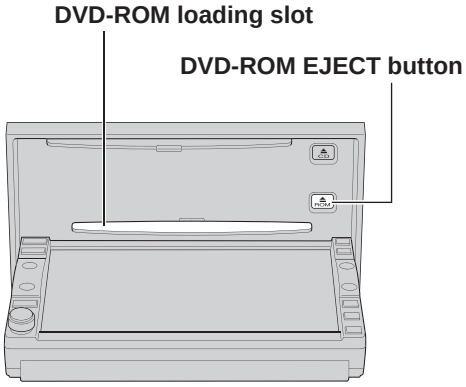

To close the LCD panel, press **OPEN/CLOSE** button again.

2 Insert the DVD Map Disc into the DVD-ROM loading slot.

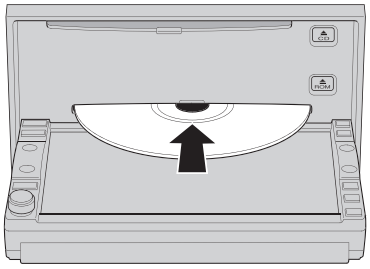

If you insert the DVD Map Disc, the LCD panel closes automatically, and then format reading will start.

Make sure the DVD-ROM loading slot is empty before inserting a DVD Map Disc.

Inserting the DVD Map Disc reboot DVD navigation mode.

Do not insert anything other than a disc into the DVD-ROM loading slot.

If you cannot insert a disc completely or if a inserted disc is not recognized, check that the label side of the disc is up. Press **DVD-ROM EJECT** button to eject the disc, and check the disc for damage before inserting the disc again.

Ejecting the DVD Map Disc

1 Press and hold OPEN/CLOSE button.
The LCD panel fully opens.

2 Press DVD-ROM EJECT button.
The DVD Map Disc is ejected.

3 Press OPEN/CLOSE button.
The LCD panel closes.

Adjusting the LCD Panel Angle

⚠ CAUTION

- **Do not open and close the LCD panel with hands by force. This may cause malfunction.**
- **When opening, closing and adjusting the angle of the LCD panel, be careful not to get your finger caught.**

The LCD panel will be closed automatically with the turning of the ignition switch.

- **Press ANGLE button to adjust the LCD panel to an easily viewable angle.**
  You can adjust the angle of the LCD panel every time you press the **ANGLE** button.
  The LCD panel angle continues changing as long as you press **ANGLE** button and hold.

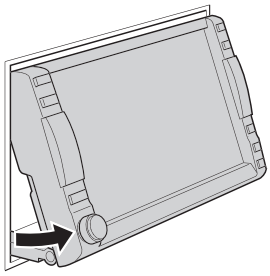

When you press the **ANGLE** button with the maximum angle, the LCD panel closes all the way.

The adjusted angle of the LCD panel will be memorized and the LCD panel will automatically return to this angle the next time the turning of the ignition switch (ACC) on.

● Connection diagram

Connecting the system

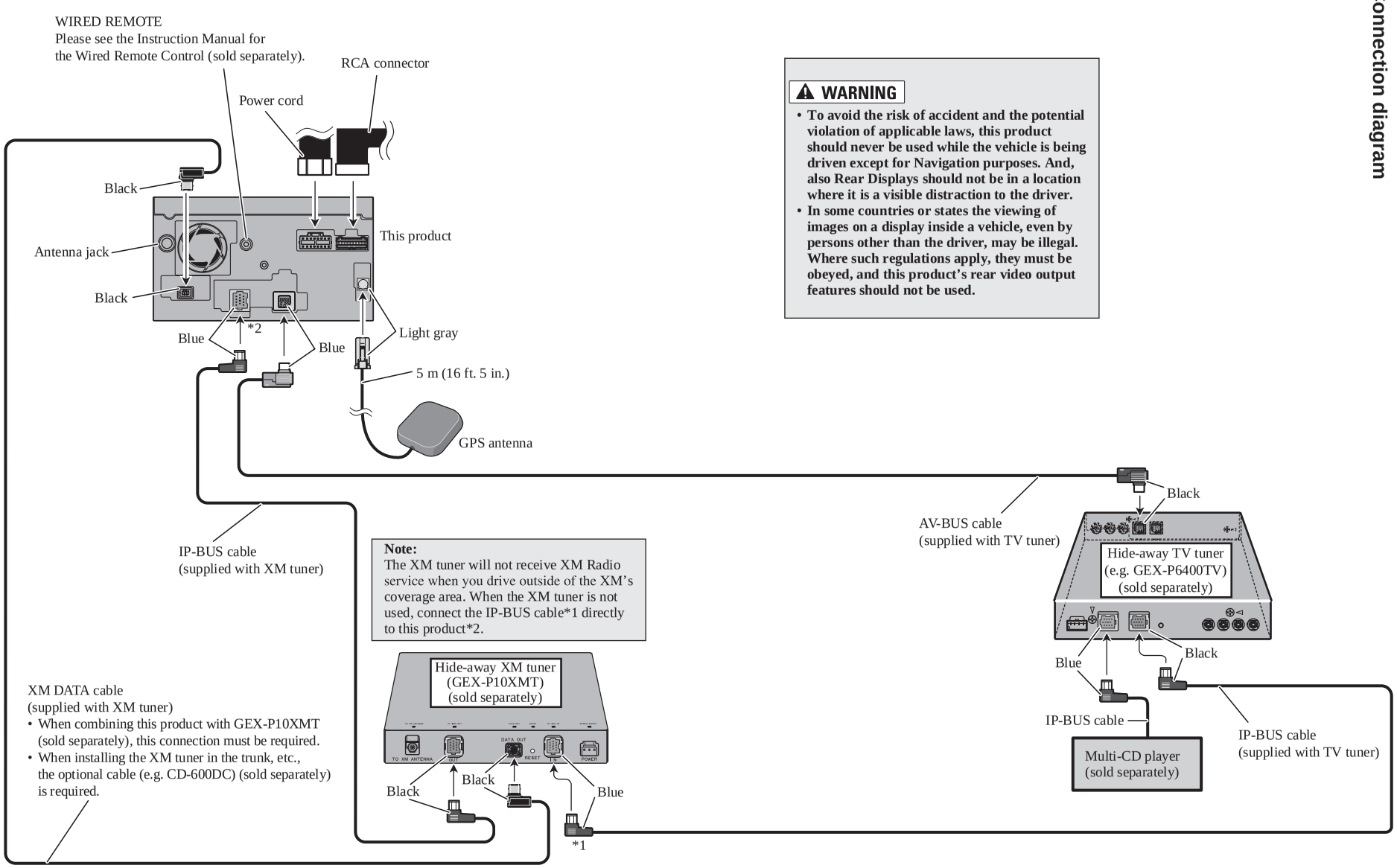

⚠ WARNING

- **To avoid the risk of accident and the potential violation of applicable laws, this product should never be used while the vehicle is being driven except for Navigation purposes. And, also Rear Displays should not be in a location where it is a visible distraction to the driver.**
- **In some countries or states the viewing of images on a display inside a vehicle, even by persons other than the driver, may be illegal. Where such regulations apply, they must be obeyed, and this product's rear video output features should not be used.**

Note:
The XM tuner will not receive XM Radio service when you drive outside of the XM's coverage area. When the XM tuner is not used, connect the IP-BUS cable*1 directly to this product*2.

Connecting the power cord (1)

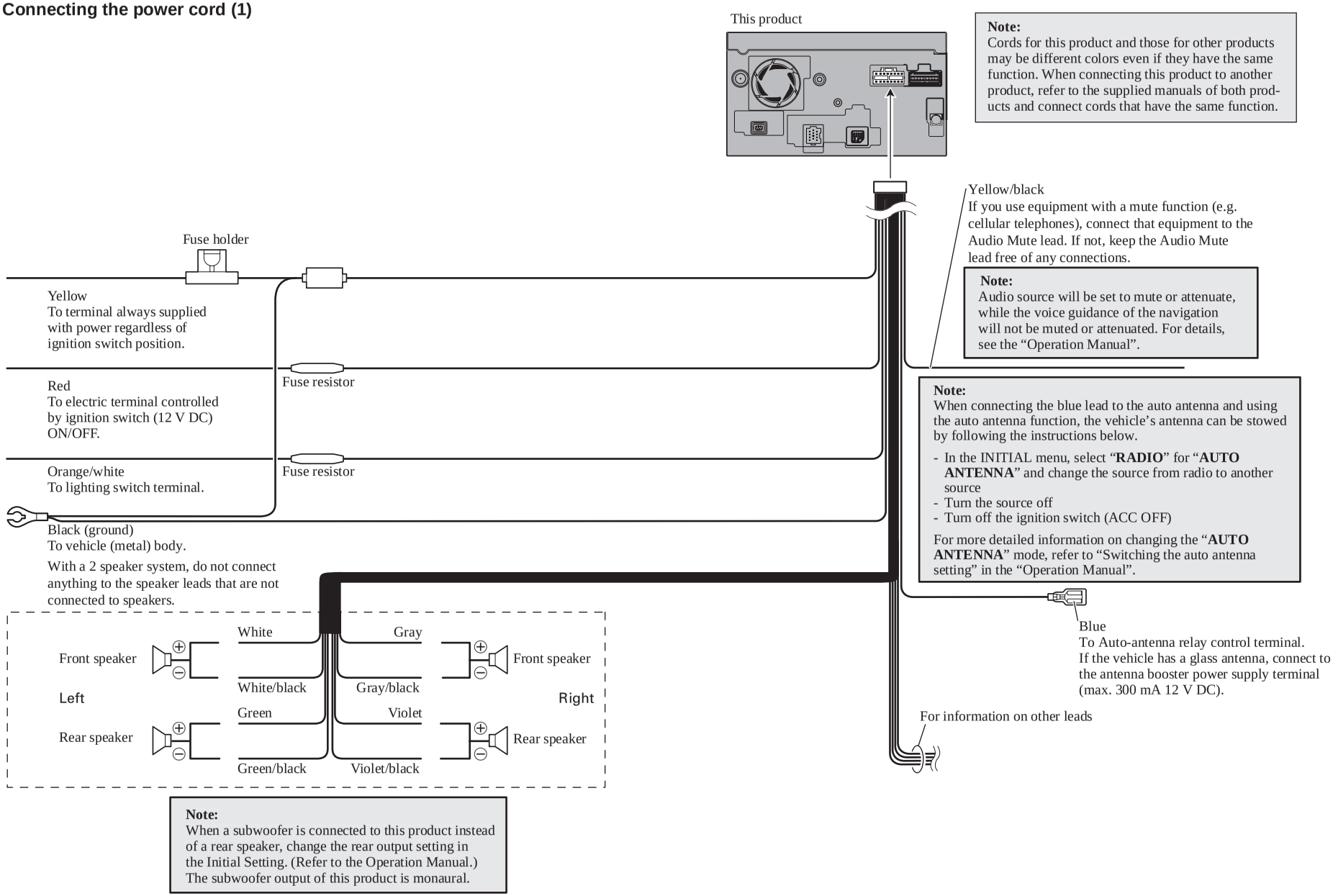

Connecting the power cord (2)

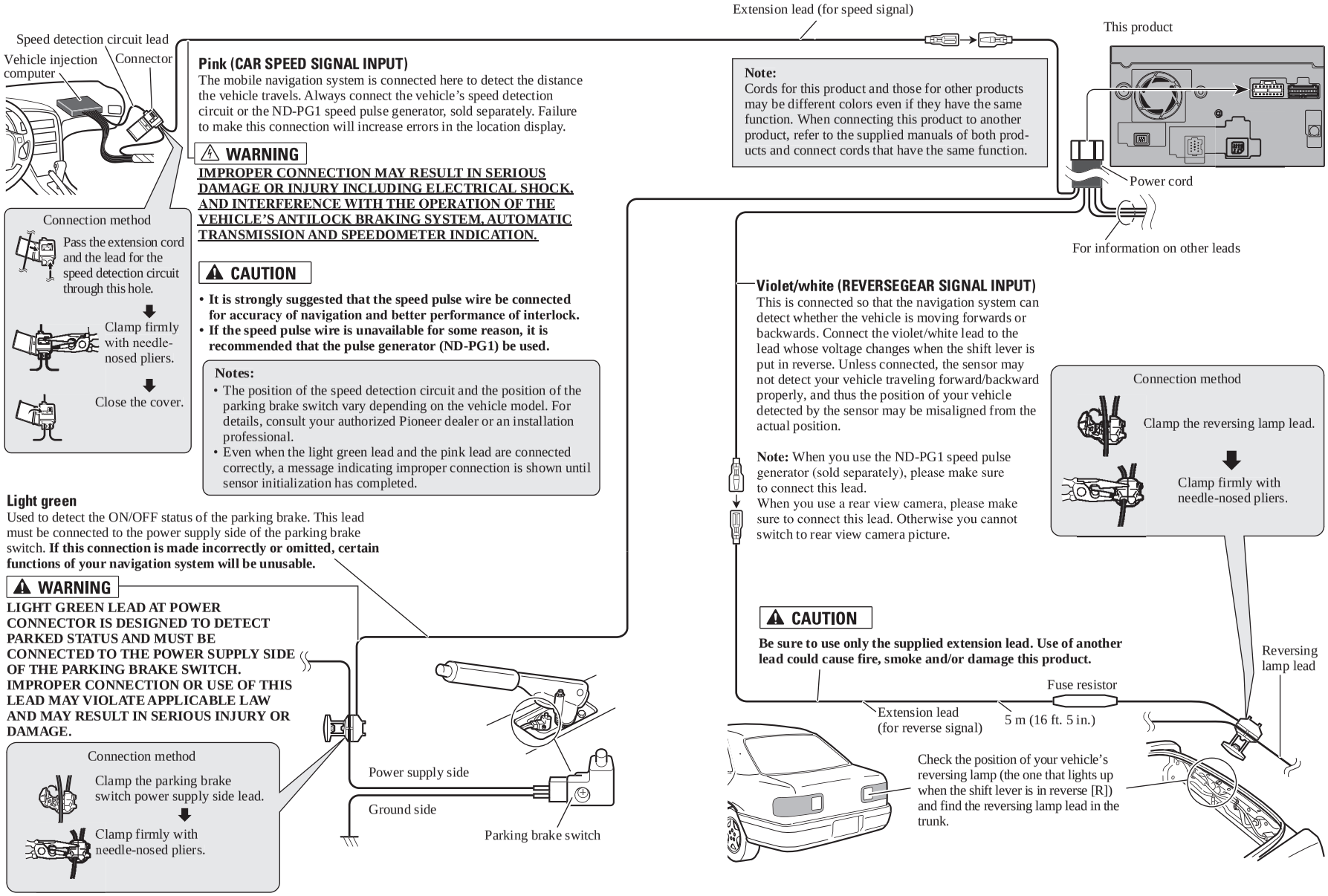

Pink (CAR SPEED SIGNAL INPUT)
The mobile navigation system is connected here to detect the distance the vehicle travels. Always connect the vehicle's speed detection circuit or the ND-PG1 speed pulse generator, sold separately. Failure to make this connection will increase errors in the location display.

⚠ WARNING

IMPROPER CONNECTION MAY RESULT IN SERIOUS DAMAGE OR INJURY INCLUDING ELECTRICAL SHOCK, AND INTERFERENCE WITH THE OPERATION OF THE VEHICLE'S ANTILOCK BRAKING SYSTEM, AUTOMATIC TRANSMISSION AND SPEEDOMETER INDICATION.

⚠ CAUTION

- **It is strongly suggested that the speed pulse wire be connected for accuracy of navigation and better performance of interlock.**
- **If the speed pulse wire is unavailable for some reason, it is recommended that the pulse generator (ND-PG1) be used.**

Notes:
- The position of the speed detection circuit and the position of the parking brake switch vary depending on the vehicle model. For details, consult your authorized Pioneer dealer or an installation professional.
- Even when the light green lead and the pink lead are connected correctly, a message indicating improper connection is shown until sensor initialization has completed.

Light green
Used to detect the ON/OFF status of the parking brake. This lead must be connected to the power supply side of the parking brake switch. **If this connection is made incorrectly or omitted, certain functions of your navigation system will be unusable.**

⚠ WARNING

LIGHT GREEN LEAD AT POWER CONNECTOR IS DESIGNED TO DETECT PARKED STATUS AND MUST BE CONNECTED TO THE POWER SUPPLY SIDE OF THE PARKING BRAKE SWITCH. IMPROPER CONNECTION OR USE OF THIS LEAD MAY VIOLATE APPLICABLE LAW AND MAY RESULT IN SERIOUS INJURY OR DAMAGE.

Note:
Cords for this product and those for other products may be different colors even if they have the same function. When connecting this product to another product, refer to the supplied manuals of both products and connect cords that have the same function.

Violet/white (REVERSEGEAR SIGNAL INPUT)
This is connected so that the navigation system can detect whether the vehicle is moving forwards or backwards. Connect the violet/white lead to the lead whose voltage changes when the shift lever is put in reverse. Unless connected, the sensor may not detect your vehicle traveling forward/backward properly, and thus the position of your vehicle detected by the sensor may be misaligned from the actual position.

Note: When you use the ND-PG1 speed pulse generator (sold separately), please make sure to connect this lead.
When you use a rear view camera, please make sure to connect this lead. Otherwise you cannot switch to rear view camera picture.

⚠ CAUTION

Be sure to use only the supplied extension lead. Use of another lead could cause fire, smoke and/or damage this product.

When connecting to separately sold power amp

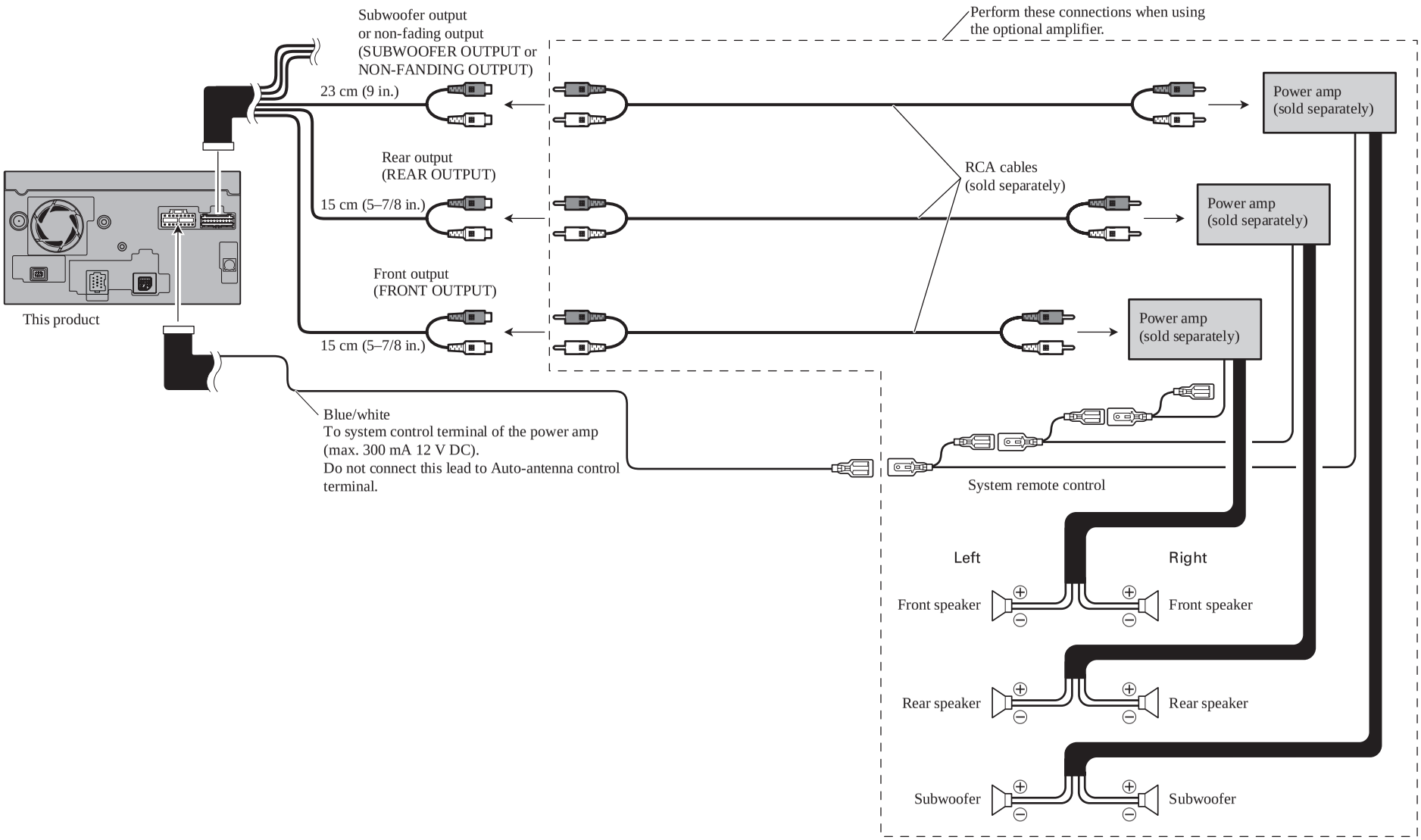

After Installing this product

1. **Reconnecting the battery.**
   First, double-check that all connections are correct and that this product is installed correctly. Reassemble all vehicle components that you previously removed. Then reconnect the negative (–) cable to the negative (–) terminal of the battery.
2. **Start the engine.**
3. **Press the RESET button on this product.**
   Press the RESET button on this product using a pointed object such as the tip of a pen.

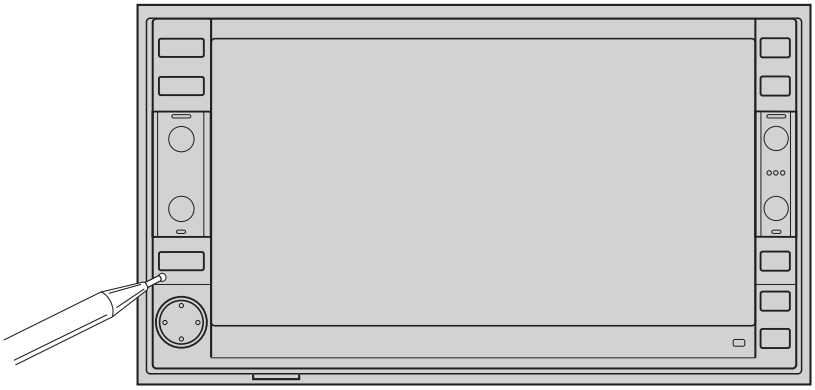

4. **Enter the following settings:**
   1 Install the program in the navigation system.
   2 Make any necessary installation angle adjustments.
   3 Drive until the initialized sensors start operating normally.
   4 Set the time and language.

After installing this product, be sure to check in a safe place, that the vehicle is performing normally.

● Jigs List

Name	Jig No.	Remarks
45-Pin FFC	GGD1321	DVD Mechanism Module(MS3)(CN601) <--> CC Unit(CN2)
23-Pin BBR FFC	GGD1307	CD Mechanism Module(S10.1)(CN901) <--> System Unit(CN1301)
80-Pin FFC	GGD1406	System Unit(CN1701) <--> CC Unit(CN605)
20-Pin Extension Cord	GGD1327	System Unit(CN1802) <--> CC Unit(CN801)
30-Pin FFC	GGD1171	CC Unit(CN702) <--> Connector Unit(CN2804)
33-Pin FFC	GGD1262	CC Unit(CN701) <--> Monitor PCB(CN5002)
Monitor Adjustment PCB	GGF1416	For OSD display (*1)
Test Disc	GGV1237	Operation check
Test Disc	TCD-782	Checking the grating(CD)
L.P.F.		Checking the grating(Two pieces)
Test Disc	GGV1018	Checking the grating(DVD)

Before shipping out the product, be sure to clean the following portions by using the prescribed cleaning tools:

Portions to be cleaned	Cleaning tools
DVD, CD pickup lenses	Cleaning liquid : GEM1004 Cleaning paper : GED-008

Portions to be cleaned	Cleaning tools
Fans	Cleaning paper : GED-008